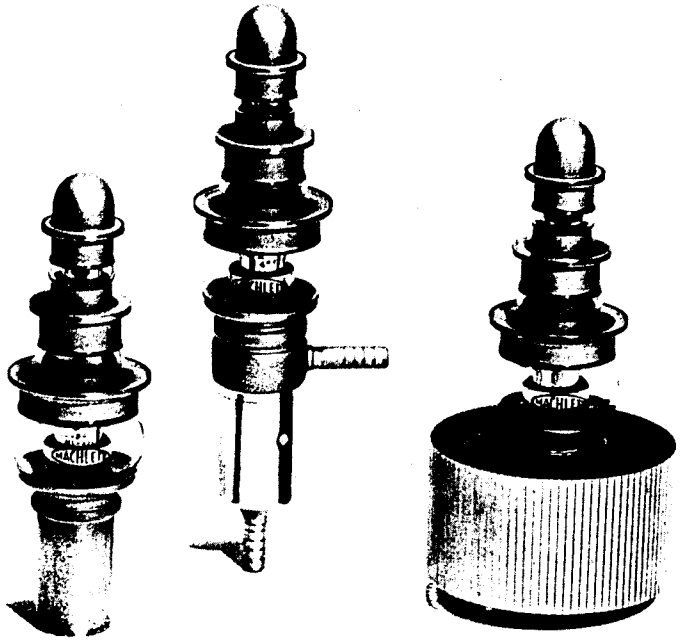

MACHLETT

ML-6256
ML-6257
ML-6258

DESCRIPTION & RATINGS

DESCRIPTION

The ML-6256, ML6257, and ML-6258 are three-electrode tubes designed for induction and dielectric heating and FM broadcasting service. These tubes feature coaxial-electrode structures, ideal for circuits of the coaxial-cylinder type, and provide large-area, low inductance r-f electrode terminals. They are particularly suitable for cathode-drive operation. The ML-6256 and ML-6257 have water-cooled anodes capable of dissipating 5 kW with a water flow of 3 gpm; the ML-6257 incorporates a water jacket as an integral part of the anode structure. The anode of the ML-6258 is forced-air cooled and is capable of dissipating 3 kW with an air flow of approximately 190 cfm. The cathode of each type is a thoriated-tungsten filament. Maximum ratings apply up to 40 Mc.

GENERAL CHARACTERISTICS

Electrical		
Filament Voltage		12.6 Volts
Filament Current		29 Amps
Filament Starting Current, maximum		120 Amps
Filament Cold Resistance		.0053 Ohm
Amplification Factor		20
Direct Interelectrode Capacitances	**ML-6256 & ML-6257**	**ML-6258**
Grid-Plate	19	20 uuf
Grid-Filament	18	18 uuf
Plate-Filament	0.6	0.7 uuf
Mechanical		
Mounting Position		
ML-6256 & ML-6257		Vertical, anode down
ML-6258		Vertical, anode up or down
Type of Cooling — ML-6256 & ML-6257		Water and forced-air*
Water Flow on Anode for 5 kW Dissipation		3-5 gpm
Maximum Outgoing Water Temperature		70 °C
Type of Cooling — ML-6258		Forced-air
Air Flow on Anode for 3 kW Dissipation		190 cfm at 1.2" water
Air Flow on Glass and Seals		See Note
Maximum Incoming Air Temperature		45 °C
Maximum Glass Temperature		165 °C
Net Weight, approximate		
ML-6256		1.5 lbs.
ML-6257		1.75 lbs.
ML-6258		5.25 lbs.

*Note: At frequencies up to 15 Mc, normal cabinet ventilation should be sufficient to cool the glass portions of the tube. At higher frequencies or high ambient temperatures, auxilary air flow in the order of 10 cfm may be required and should be distributed to maintain uniform glass temperature, not greater than 165°C, around the circumference of the seals.

MAXIMUM RATINGS AND TYPICAL OPERATING CONDITIONS

R-F Power Amplifier and Oscillator—Class C

Key-down conditions per tube without amplitude modulation‡

Maximum Ratings, Absolute Values

	ML-6256 & ML-6257	ML-6258	
D-C Plate Voltage	6000	6000	volts
D-C Grid Voltage	−1500	−1500	volts
D-C Plate Current	1.5	1.5	amps
D-C Grid Current	200	200	mA
Plate Input	7	7	kW
Plate Dissipation	5	3	kW

Typical Operation (Values apply to all three tube types)

R-F Oscillator, Grid-Drive Circuit

D-C Plate Voltage	4200	5300	volts
D-C Grid Voltage	-400	-500	volts
Peak R-F Grid Voltage	720	850	volts
Peak R-F Plate Voltage	3100	4000	volts
D-C Plate Current	1.1	1.3	amps
D-C Grid Current	110	110	mA
R-F Load Resistance	1600	1750	ohms
Power Output, approximate	3.0	4.5	kW

R-F Amplifier, Cathode-Drive Circuit — 110 Mc

D-C Plate Voltage	5000	volts
D-C Grid Voltage	-500	volts
Peak R-F Grid Voltage	870	volts
Peak R-F Plate Voltage	3900	volts
D-C Plate Curernt	1.3	amps
D-C Grid Current	150	mA
R-F Load Resistance	2050	ohms
Driving Power, approximate	1100	watts
Power Output, approximate*	5.5	kW

‡Modulation essentially negative may be used if the positive peak of the envelope does not exceed 115% of the carrier conditions.
*Includes power transferred from driver stage.

ML-6256 & ML-6257

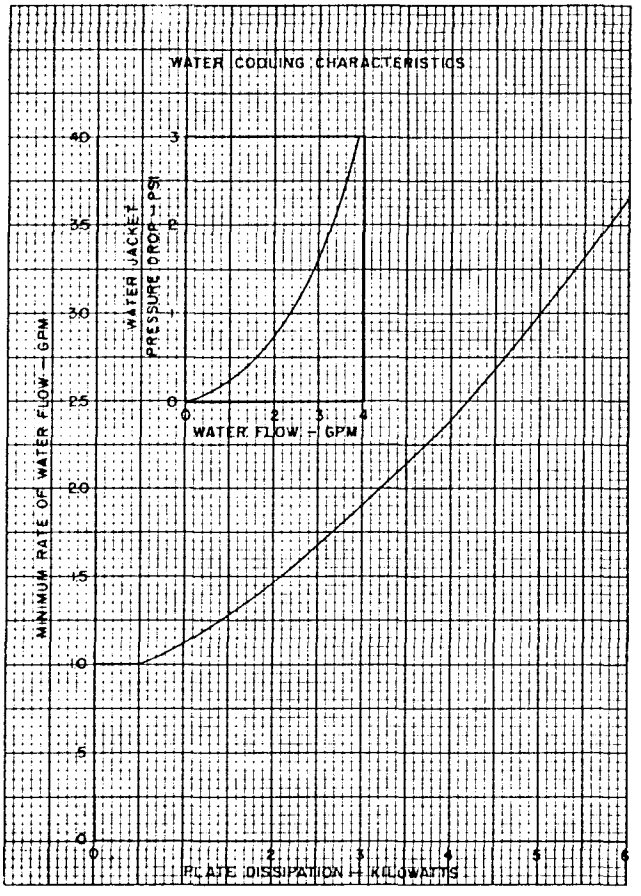

A-13042/R1

ML-6258

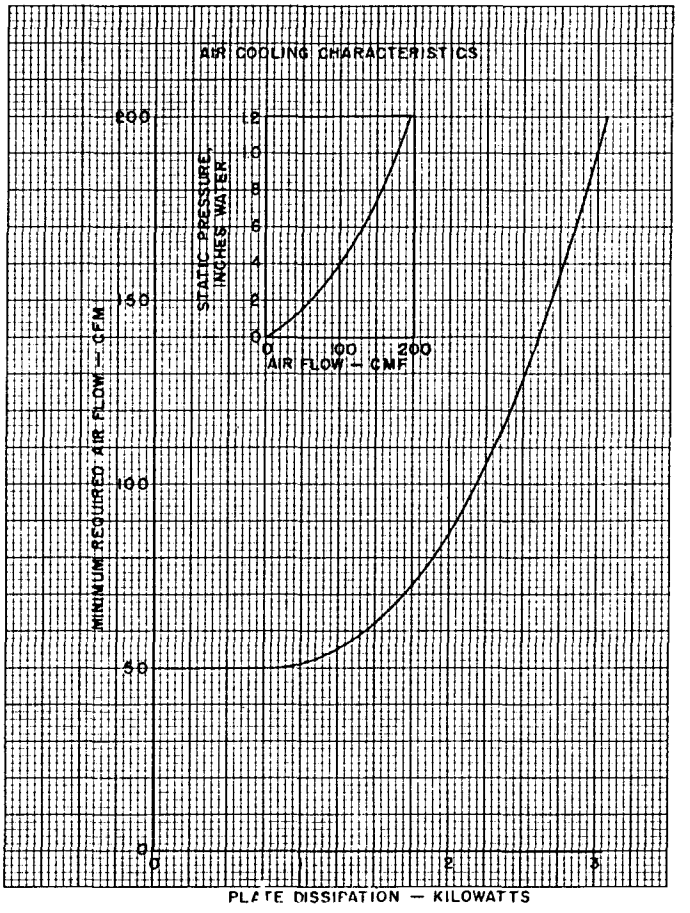

A-13038

CHARACTERISTIC RANGE VALUES FOR EQUIPMENT DESIGN

Characteristics	Conditions		Limits Minimum	Limits Bogey	Limits Maximum
Grid Voltage	e_b = 1000 volts; i_b = 6 amps	e_c:	——	——	470 volts
Grid Current	e_b = 1000 volts; i_b = 6 amps	i_c:	——	——	1.6 amps
Plate Voltage	E_c = 0 Vdc; I_b = 0.5 Adc	E_b:	1.4	1.9	2.2 kVdc
Plate Voltage	E_c = -100 Vdc; I_b = 0.5 Adc	E_b:	3.4	3.9	4.4 kVdc
Grid Voltage	E_b = 5.0 kVdc; I_b = 0.02 Adc	E_c:	−220	−270	−320 Vdc
Plate Power Output	E_b = 5.3 kVdc; E_c = -500 Vdc I_b = 1.3 Adc; I_c = 110 mAdc	P_o:	3.9	——	—— kW

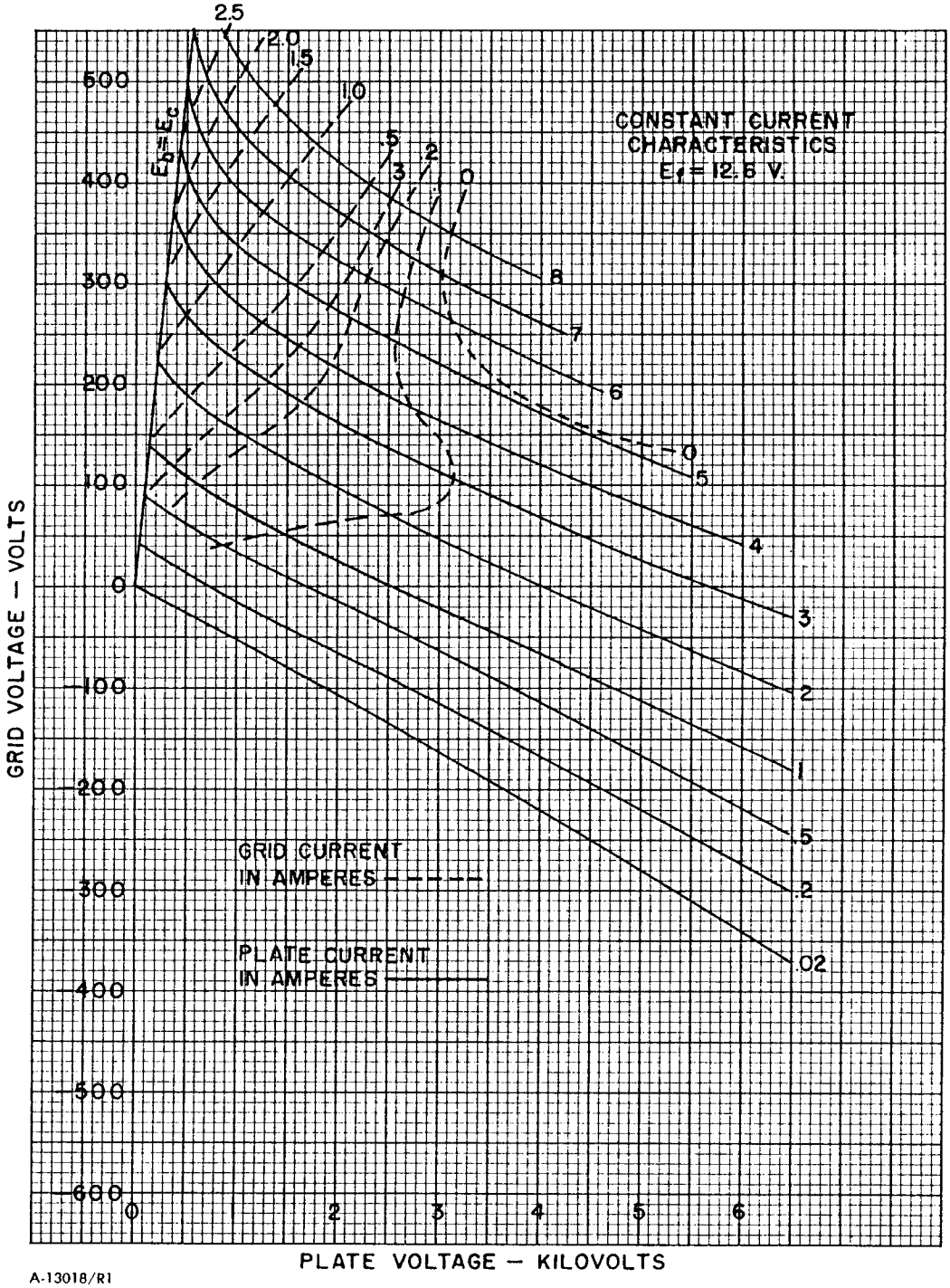

A-13018/R1

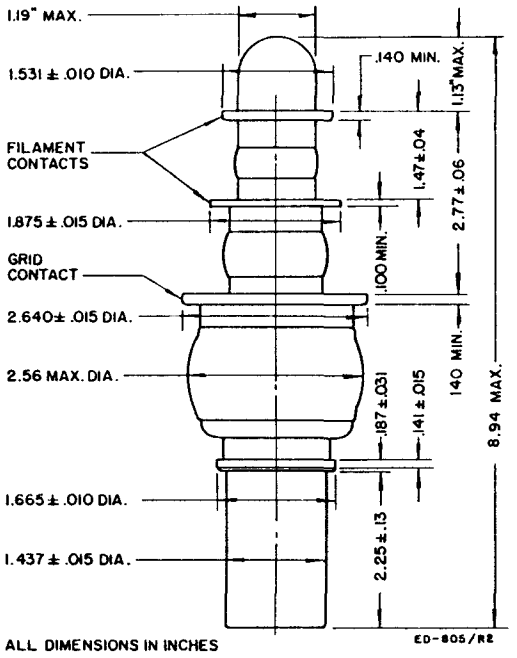

DIMENSIONS — ML-6256

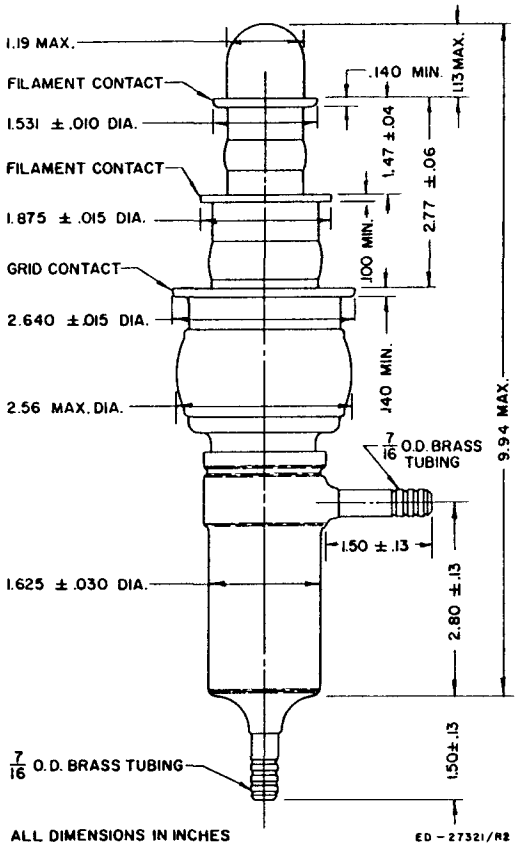

DIMENSIONS — ML-6257

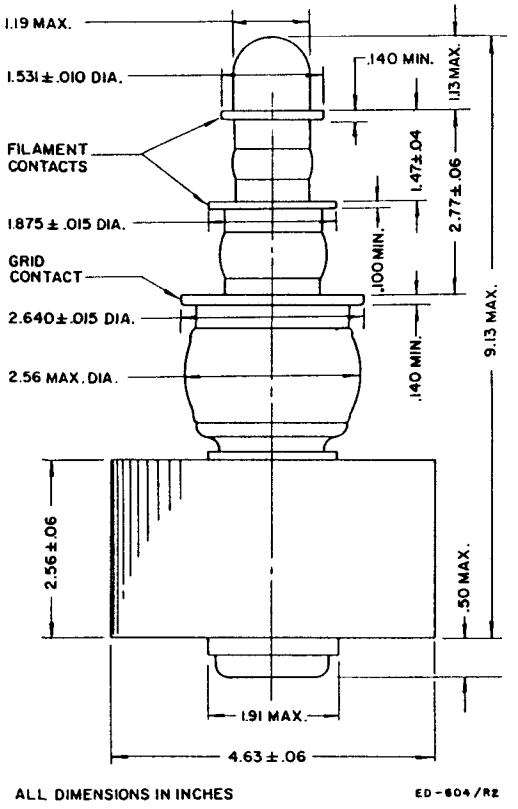

DIMENSIONS — ML-6258

THE MACHLETT LABORATORIES, INC.
a division of Raytheon Company
SPRINGDALE MACHLETT CONNECTICUT
U. S. A.

1023 5M 12-61 PRINTED IN U. S. A.