6217

MULTIPLIER PHOTOTUBE

10-Stage, Head-On Type
with 1-1/2" Semi-Transparent Cathode and S-10 Response

TENTATIVE DATA

RCA-6217 is a head-on type of vacuum multiplier phototube intended for use in color densitometers, spectrometers, color comparators, flying-spot signal generators, and other applications where good red sensitivity is desired.

The spectral response of the 6217 covers the range from about 3000 to 8000 angstroms, as shown by the curve in Fig. 1. This curve also shows that the 6217 has a maximum response which is essentially flat over the wide spectral range from about 3700 (violet) to 5600 (yellow) angstroms and good response through 6700 (red) angstroms.

Design features of the 6217 include a semi-transparent cathode having a diameter of 1-1/2 inches on the inner glass surface of the face end of the bulb, and ten electrostatically focused multiplying stages. The relatively large cathode area permits very efficient collection of light.

The 6217 is capable of multiplying feeble photoelectric current produced at the cathode by an average value of 600,000 times when operated with a supply voltage of 1000 volts. The output current of the 6217 is a linear function of the exciting illumination under normal operating conditions.

The frequency response of the 6217 is flat up to a frequency of about 50 megacycles per second above which the variation in electron transit time becomes the limiting factor.

DATA

General:

Spectral Response	S-10
Wavelength Range of Highest-Response Region	3700 to 5600 angstroms
Cathode, Semi-transparent:	
Shape	Circular
Window:	
Area	1.8 sq. in.
Minimum Diameter	1.5 in.
Index of Refraction	1.51
Direct Interelectrode Capacitances:	
Anode to Dynode No.10	4.2 μμf
Anode to All Other Electrodes	6.5 μμf
Overall Length	5-5/8" ± 3/16"
Seated Length	4-7/8" ± 3/16"
Maximum Diameter	2-1/4"
Bulb	T-16
Base	Medium-Shell Diheptal 14-Pin, Non-hygroscopic (JETEC No.B14-38)
Mounting Position	Any

Maximum Ratings, *Absolute Values:*

ANODE-SUPPLY VOLTAGE (DC or Peak AC)□	1250 max.	volts
SUPPLY VOLTAGE BETWEEN DYNODE No.10 AND ANODE (DC or Peak AC)	150 max.	volts
ANODE CURRENT:		
Peak	7.5 max.	ma
Average○	0.75 max.	ma
Average for Minimum Fatigue○	0.1 max.	ma
AMBIENT TEMPERATURE	75 max.	°C

Characteristics Range Values for Equipment Design:

Under conditions with supply voltage (E) across voltage divider providing 1/6 of E between cathode and dynode No.1; 1/12 of E for each succeeding dynode stage; and 1/12 of E between dynode No.10 and anode.

With E = 1000 volts (except as noted)

	Min.	*Av.*	*Max.*	
Sensitivity:				
Anode, at 5400 angstroms	–	8500	–	μamp/μwatt
Luminous:				
Anode:*				
At 0 cps	10	24	–	amp/lumen
At 100 Mc	–	21	–	amp/lumen
Cathode:				
With Tungsten Light Source●	20	40	–	μamp/lumen
With Red-Infrared Light Source (See Fig.2)#	0.05	–	–	μamp
Current Amplification■	–	600000	–	
Equivalent Anode-Dark Current Input**	–	1×10^{-8}	2.5×10^{-8}	lumen
Equivalent Noise Input##	–	4×10^{-11}	–	lumen

□ Referred to cathode.

○ Averaged over any interval of 30 seconds maximum.

Copyright, 1952
Radio Corporation of America
TMK ® Marca Registrada

With E = 750 volts (except as noted)

	Min.	Av.	Max.	
Sensitivity:				
Anode, at 5400 angstroms .	–	850	–	μamp/μwatt
Luminous:				
Anode:*				
At 0 cps	–	2.4	–	amp/lumen
Cathode:				
With Tungsten Light Source● .	20	40	–	μamp/lumen
With Red-Infrared Light Source (See Fig. 2)# .	0.05	–	–	μamp
Current Amplification■ . .	–	60000	–	

* For conditions where the light source is a tungsten-filament lamp operated at a color temperature of 2870°K. A light input of 10 microlumens is used. The load resistor has a value of 0.01 megohm.

● For conditions the same as shown under (*) except that the value of light flux is 0.01 lumen and that 150 volts are applied between cathode and all other electrodes connected together as anode.

\# Under the following conditions: Light incident on the cathode is transmitted through a red-infrared filter (combination of Corning, Glass Code Nos.3482 and 5850 filters) from a tungsten-filament lamp operated at a color temperature of 2870°K. The value of light flux on the filter is 0.1 lumen. The load resistor has a value of 0.01 megohm, and 150 volts are applied between cathode and all other electrodes connected together as anode. This test evaluates the magnitude of the infra-red response in the tail of the response characteristic and provides a critical criterion for the response in the red band.

■ Ratio of anode sensitivity to cathode sensitivity under conditions of 2870°K tungsten light input.

** Defined as the quotient of the dc anode dark current by the anode luminous sensitivity. After tube has been in the dark for 30 minutes, the equivalent dark-current input is measured at a tube temperature of 25°C and with the supply voltage (E) adjusted to give an anode luminous sensitivity of 20 amperes per lumen. Dark current caused by thermionic emission and ion feedback may be reduced by the use of a refrigerant.

\#\# Defined as the value where the rms output current is equal to the rms noise current determined under the following conditions: Supply voltage (E) is 1000 volts, 25°C tube temperature, ac-amplifier bandwidth of 1 cycle per second, tungsten light source of 2870°K interrupted at a low audio frequency to produce incident radiation pulses alternating between zero and the value stated. The "on" period of the pulse is equal to the "off" period. The output current is measured through a filter which passes only the fundamental frequency of the pulses.

GENERAL CONSIDERATIONS

An *electron multiplier* is a vacuum tube which utilizes the phenomenon of secondary emission to amplify signals composed of electron streams. In the 6217 multiplier phototube, represented in Fig.3, the electrons emitted from the illuminated, semi-transparent cathode are directed by fixed electrostatic fields to the first dynode (secondary emitter). The electrons impinging on the dynode surface produce many other electrons, the number depending on the energy of the impinging electrons. These secondary electrons are then directed by fixed electrostatic fields along curved paths to the second dynode where they produce more new electrons. This multiplying process is repeated in each successive stage, with an ever-increasing stream of electrons until those emitted from the last dynode (dynode No.10) are collected by the anode and constitute the current utilized in the output circuit.

Dynode No.10 is so shaped as to enclose partially the anode and to serve as a shield for it, in order to prevent the fluctuating potential of the anode from interfering with electron focusing in the interdynode region. Actually the anode

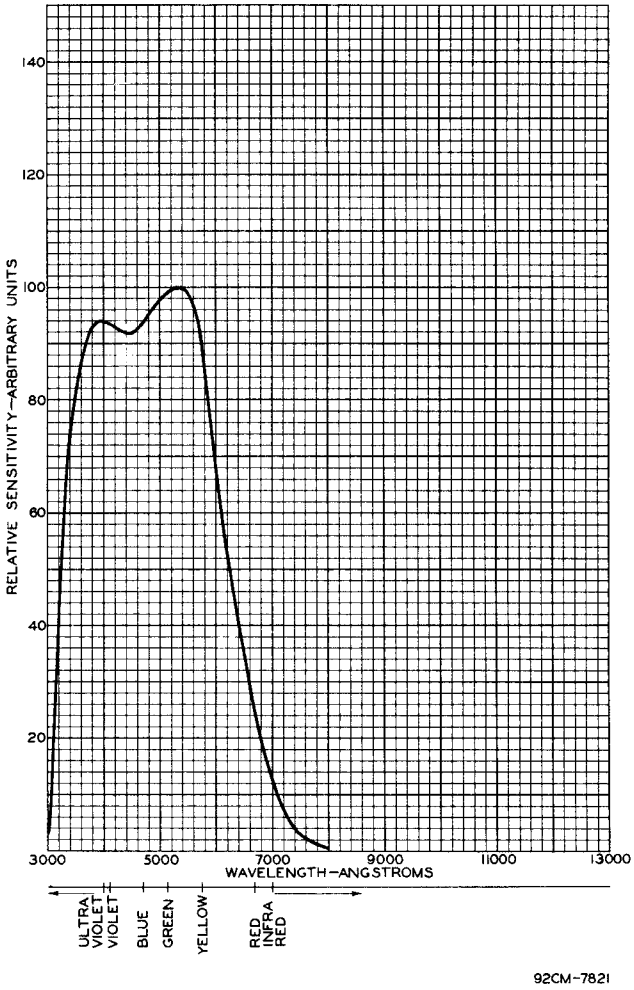

Fig.1 - Spectral Sensitivity Characteristic of Type 6217 which has S-10 Response. Curve is taken for Equal Values of Radiant Flux at All Wavelengths.

consists of a grid which allows the electrons from dynode No.9 to pass through it to dynode No.10. Spacing between dynode No.10 and anode creates a collecting field such that all the electrons it emits are collected by the anode. Hence, the output current is substantially independent of the instantaneous positive anode potential over a wide range. As a result of this characteristic, the 6217 can be coupled to any practical load impedance.

The shield which extends between dynode No. 1 and the anode shields dynode No. 1 and the cathode from the anode and prevents ion feedback. If positive ions produced in the high-current region near the anode were allowed to reach the cathode or the initial dynode stages, they would cause

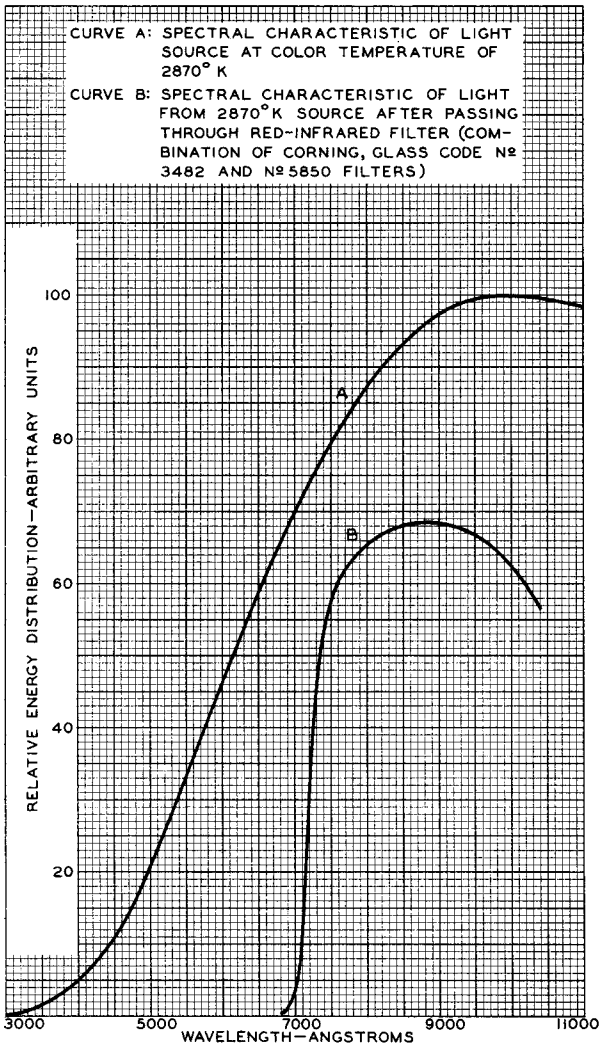

Fig. 2 - Spectral Characteristic of 2870°K Light Source, and Spectral Characteristic of Light from 2870°K Source After Passing Through Indicated Filter.

the emission of spurious electrons which after multiplication would produce undesirable and often uncontrollable regeneration. The metallic coating on the inner side wall of the glass bulb is connected to the cathode, and serves not only to prevent extraneous light from reaching dynode No. 1, but also to direct the electrons from the cathode toward dynode No. 1.

The grill through which the electrons reach dynode No. 1, is connected to dynode No. 1 and serves along with the accelerating electrode as an electrostatic shield for the open side of the electrode structure.

When the 6217 is operated with a very low cathode current, random variations occur in the rate of electron emission, and are observed as shot noise. Noise is also caused if the 6217 is operated with a voltage in excess of the maximum rating or if the voltage between dynode No. 1 and the cathode is too low. When too high a voltage per stage is used, positive-ion feedback causes regeneration, and when too low a voltage is applied between dynode No. 1 and cathode, the electrons from the cathode are not focused properly on dynode No. 1 with the result that many electrons are not channeled through the multiplier structure and gain is sacrificed. In order to minimize noise, it is recommended that the 6217 be operated

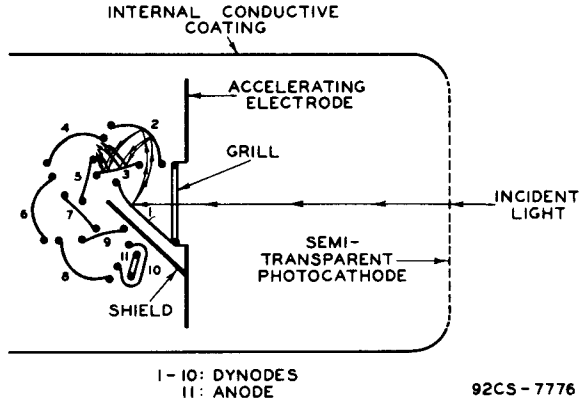

Fig. 3 - Schematic Arrangement of Type 6217 Structure.

with a voltage between dynode No. 1 and cathode which is twice that between each of the succeeding dynode stages, and that the supply voltage be limited to 750 volts.

INSTALLATION and APPLICATION

The *maximum ratings* in the tabulated data are limiting values above which the serviceability of the 6217 may be impaired from the viewpoint of life and satisfactory performance. Therefore, in order not to exceed these absolute ratings, the equipment designer has the responsibility of determining an average design value for each rating below the absolute value of that rating by an amount such that the absolute values will never be exceeded under any usual condition of supply-voltage variation, load variation, or manufacturing variation in the equipment itself.

The *maximum ambient temperature* as shown in the tabulated data is a tube rating which is to be observed in the same manner as other ratings.

This rating should not be exceeded because too high a bulb temperature may cause the volatile cathode surface and dynode surfaces to evaporate with consequent decrease in the life and sensitivity of the tube.

The *operating stability* of the 6217 is dependent on the magnitude of the anode current and its duration. When the 6217 is operated at high values of anode current, a drop in sensitivity (sometimes called fatigue) may be expected. The extent of the drop below the tabulated sensitivity values depends on the severity of the operating conditions. After a period of idleness, the 6217 usually recovers a substantial percentage of such loss in sensitivity.

The use of an average anode current well below the maximum rated value of 0.75 milliampere is recommended when stability of operation is important. When maximum stability is required, the anode current should not exceed 100 microamperes.

The *anode family* for the 6217 is shown in Fig.4.

The *range of sensitivity values* is dependent on the respective amplification of each dynode stage. Hence large variations in sensitivity can be expected between individual tubes of a given type. The overall amplification of a multiplier phototube is equal to the average amplification per stage raised to the *n*th power, where *n* is the number of stages. Thus, very small variations in amplification per stage produce very large changes in overall tube amplification.

Because these overall changes are very large, it is advisable for designers to provide adequate

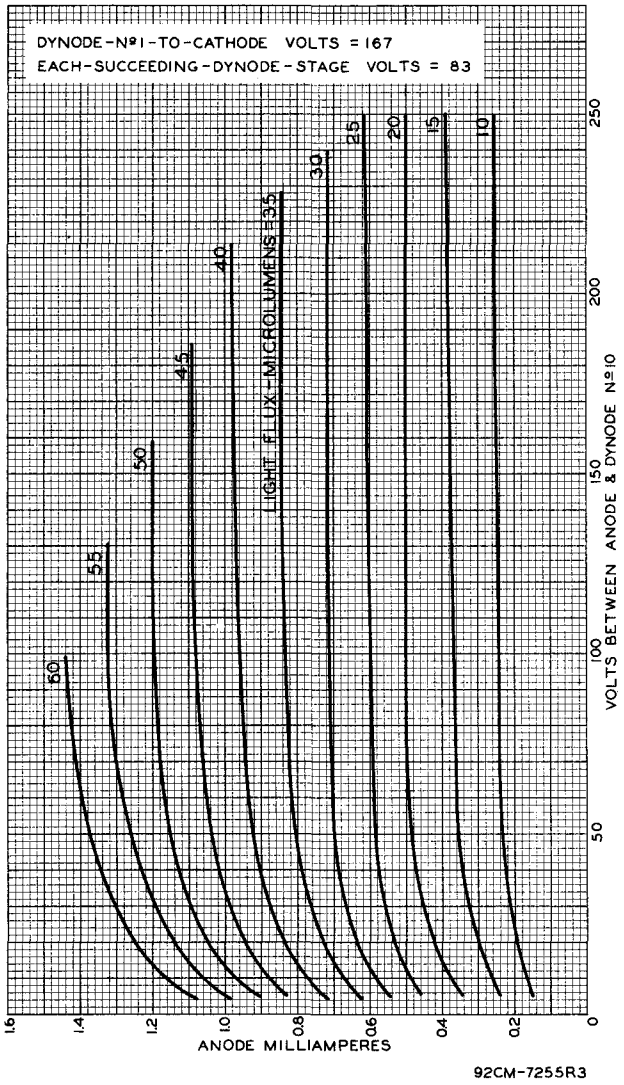

Fig.4 - Average Anode Characteristics of Type 6217.

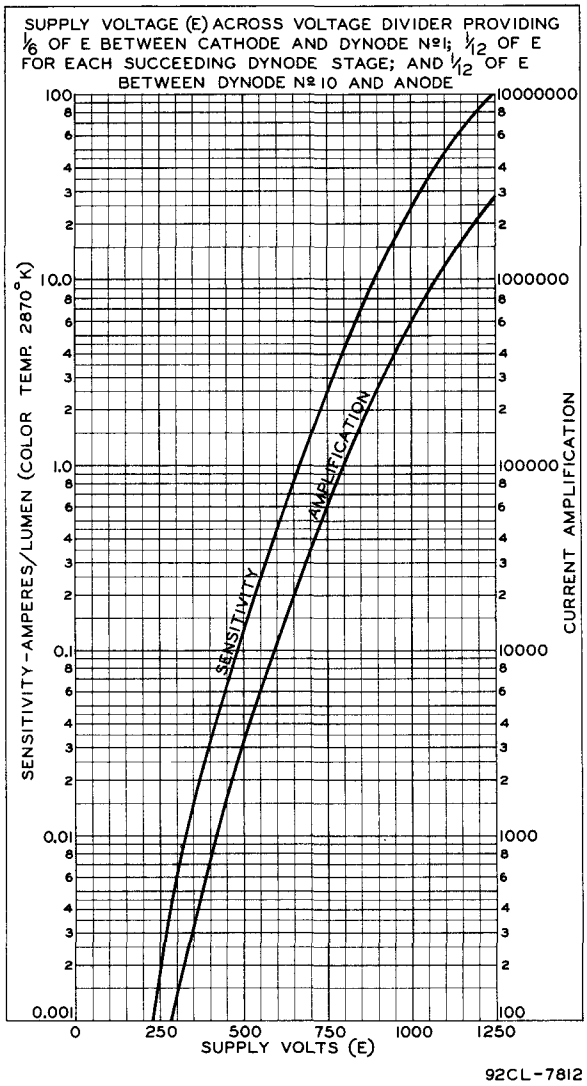

Fig.5 - Average Characteristics of Type 6217.

adjustment of the supply voltage per stage so as to be able to adjust the amplification of individual tubes to the desired design value. It is suggested that an overall voltage-adjustment range of at least 2 to 1 be provided. When the output current can be controlled by change in the illumination of the photocathode of the multiplier phototube, the required range of adjustment in the voltage per stage can be reduced.

Fig.5 shows sensitivity and current amplification characteristics of the 6217.

Magnetic shielding of the 6217 may be necessary. It will be observed with certain orientations of the 6217 that the earth's magnetic field is sufficient to cause a noticeable decrease in the response of the tube. Therefore, it may be desirable to provide magnetic shielding for the 6217, particularly when it is to be used in a strong magnetic field. The curve in Fig.6 shows the effect on anode current of variation in magnetic-field strength under the conditions indicated. With increase in voltage above 100 volts between cathode and dynode No. 1, the effect of the magnetic field will cause less decrease in anode current.

Adequate *light shielding* should be provided to prevent extraneous light from reaching any part of the 6217. Although the metallic coating on the inner side wall of the glass bulb serves to reduce the amount of extraneous light reaching the electrodes, it is inadequate to shield completely the entire structure from extraneous light.

The *use of a refrigerant*, such as dry ice or liquid air, to cool the bulb of the 6217 is recommended in those applications where maximum gain with unusually low dark current is required.

Do not expose the 6217 to intense ultraviolet or visible radiation, even with no voltage applied to the tube. Such exposure may cause an increase in anode dark current of as much as 100 times. After cessation of such irradiation, the dark current drops rapidly but remains at an abnormal value for several hours.

Whenever frequency response is important, the leads from the 6217 to the amplifier should be short so as to minimize capacitance shunting of the phototube load.

The *base pins* of the 6217 fit the medium diheptal 14-contact socket. The socket should be made of high-grade, low-leakage material, and should be installed so that the incident light falls on the face end of the tube.

The *dc supply voltages* for the electrodes can be obtained conveniently from a high-voltage, vacuum-tube rectifier. The voltage for each dynode and for the anode can be supplied by spaced taps on a voltage divider across the rectified power supply. The current through the voltage divider will depend on the voltage regulation required by the application. In general, the current in the divider should be about 10 times the maximum value of total dynode current flowing through the divider. Such a value will prevent variations of the dynode potentials by the signal current. Because of the relatively large divider current required for good regulation, the use of a rectifier of the full-wave type is recommended.

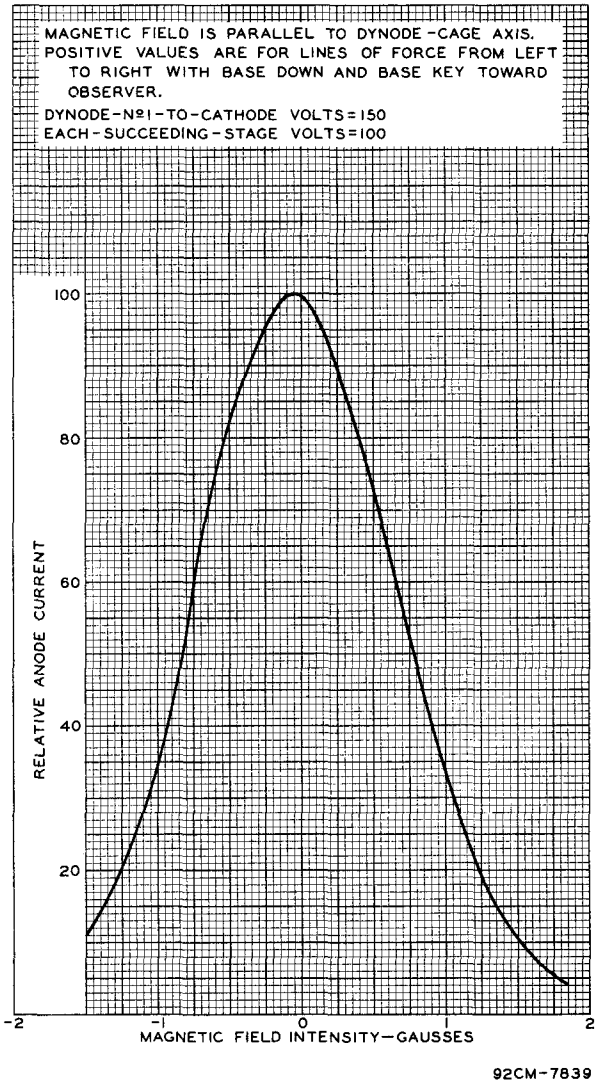

Fig.6 - Effect of Magnetic Field on Anode Current of Type 6217.

Sufficient filtering will ordinarily be provided by a well-designed, two-section filter of the capacitor-input type. A choke-input filter may be desirable for certain applications to provide better regulation. Due to critical dependence of the gain of the 6217 on voltage, rapid changes in the voltage resulting from insufficient filtering of the power supply will introduce hum modulation; and slow shifts in the line voltage due

to poor regulation will cause a change in the level of the output. When the dc supply voltage is provided by means of a rectifier, satisfactory regulation can be obtained by the use of a vacuum-tube regulator circuit of the mu-bridge type.

In most applications, it is recommended that the positive high-voltage terminal be grounded rather than the negative terminal. With this method, which places the cathode at a high negative potential with respect to ground, the dangerous voltages can more easily be made inaccessible.

The high voltages at which the 6217 is operated are very dangerous. Care should be taken in the design of apparatus to prevent the operator from coming in contact with these high voltages. Precautions should include the enclosure of high-potential terminals and the use of interlock switches to break the primary circuit of the high-voltage power supply when access to the apparatus is required.

In the use of the 6217, as with other tubes requiring high voltages, it should always be remembered that these high voltages may appear at points in the circuit which are normally at

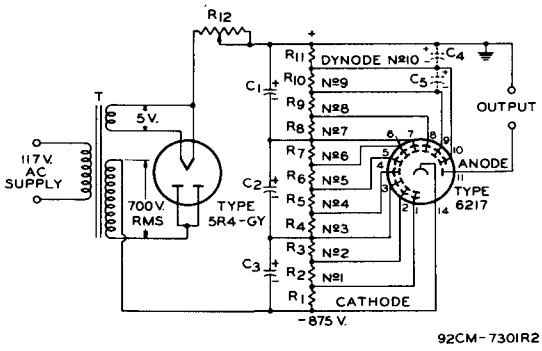

C1 C2 C3: 16 μf, electrolytic, 450 volts (dc working)
C4 C5: 8 μf, electrolytic, 150 volts (dc working)
Required only if high peak currents are drawn.
R1: 100000 ohms, 1/2 watt
R2 R3 R4 R5 R6 R7 R8 R9 R10: 50000 ohms, 1/2 watt
R11: 33000 ohms, 1/2 watt
R12: 100000 ohms, 1 watt, adjustable (Centralab A122, or equivalent)
T: United Transformer Corp. No.R-2, or equivalent

Fig.7 - Simple Half-Wave Rectifier Power-Supply Circuit with Voltage Divider for Supplying DC Voltages to Type 6217.

low potential, because of defective circuit parts or to incorrect circuit connections. Therefore, before any part of the circuit is touched, the power-supply switch should be turned off and both terminals of any capacitors grounded. Also, the use of a protective resistor having a minimum value

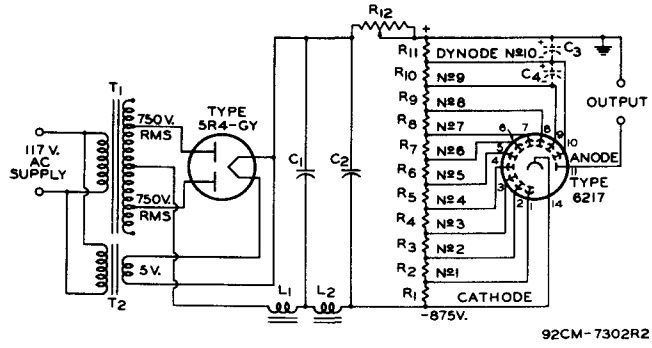

C1 C2: 2 μf, 1000 volts (dc working)
C3 C4: 8 μf, electrolytic, 150 volts (dc working)
Required only if high peak currents are drawn.
L1 L2: United Transformer Corp. No.R-17, or equivalent
R1: 39000 ohms, 2 watts
R2 R3 R4 R5 R6 R7 R8 R9 R10: 18000 ohms, 1 watt
R11: 12000 ohms, 1 watt
R12: 200000 ohms, 12 watts, adjustable (General Radio Type 471-A, or equivalent)
T1: United Transformer Corp. No.S-45, or equivalent
T2: United Transformer Corp. No.FT-6, or equivalent

Fig.8 - Full-Wave Rectifier Power-Supply Circuit with Voltage Divider for Supplying DC Voltages to Type 6217 in Applications Critical as to Hum Modulation.

of 10,000 ohms in the output circuit is recommended as a desirable procedure to prevent possible damage to component parts during adjustment.

Typical power-supply circuits for the 6217 are shown in Figs.7 and 8. The circuit in Fig.7 utilizes a half-wave rectifier to provide the dc power for the 6217. In applications where excellent regulation particularly for wide variation in output current of the 6217 is required and where minimum hum modulation is essential, the circuit of Fig.8 may be used.

REFERENCES

R. B. Janes and A. M. Glover, *"Recent Developments in Phototubes,"* RCA Review, Vol.6, No.1, pp.43-54, July, 1941.

Ralph W. Engstrom, *"Multiplier Phototube Characteristics; Application to Low Light Levels,"* Journal of the Optical Society of America, Vol.37, pp.420-431, June, 1947.

F. V. Hunt and R. W. Hickman, *"On Electronic Voltage Stabilizers,"* Review of Scientific Instruments, Vol.10, pp.6-21, January, 1939.

R. W. Engstrom, R. G. Stoudenheimer, and A. M. Glover, *"Production Testing of Multiplier Phototubes Designed for Scintillation Counter Applications,"* Nucleonics, Vol.10, No.4, pp.58-62, April, 1952.

Devices and arrangements shown or described herein may use patents of RCA or others. Information contained herein is furnished without responsibility by RCA for its use and without prejudice to RCA's patent rights.

DIMENSIONAL OUTLINE

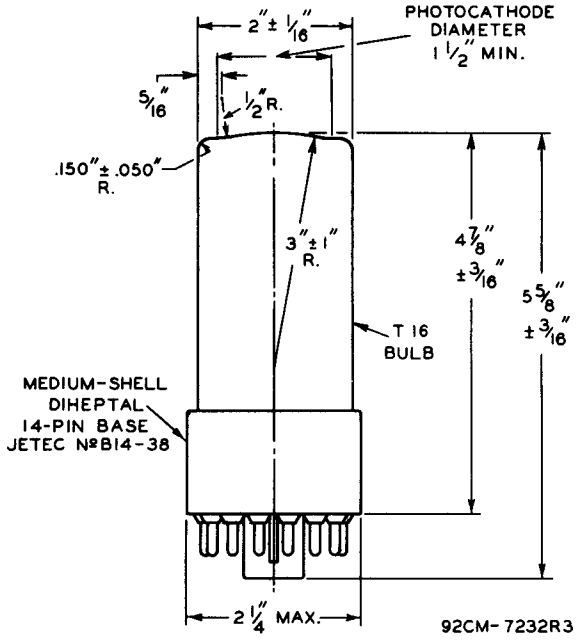

℄ OF BULB WILL NOT DEVIATE MORE THAN 2° IN ANY DIRECTION FROM THE PERPENDICULAR ERECTED AT THE CENTER OF BOTTOM OF THE BASE.

SOCKET CONNECTIONS
Bottom View

PIN 1: DYNODE NO. 1
PIN 2: DYNODE No. 2
PIN 3: DYNODE No. 3
PIN 4: DYNODE No. 4
PIN 5: DYNODE No. 5
PIN 6: DYNODE No. 6
PIN 7: DYNODE No. 7
PIN 8: DYNODE No. 8

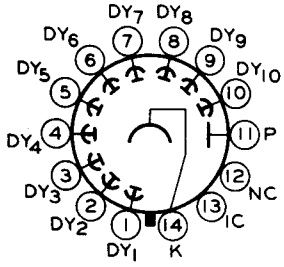

DIRECTION OF LIGHT: INTO END OF BULB

PIN 9: DYNODE No. 9
PIN 10: DYNODE No. 10
PIN 11: ANODE
PIN 12: NO CONNECTION
PIN 13: INTERNAL CONNECTION--DO NOT USE
PIN 14: CATHODE