from RTMA release #994, July 9, 1951

GENERAL CHARACTERISTICS

A microwave oscillator of the single cavity (integral) reflex type designed for operation in the frequency range from 5100 to 5900 megacycles with a minimum power output of 70 milliwatts at 5500 MC.

Heater Voltage (AC or DC)	6.3 Volts
Heater Current	440 MA.
Frequency Range	5100 to 5900 MC

MAXIMUM RATINGS

DC Resonator Voltage	330 Max. Volts
DC Resonator Current	35 MA.
DC Reflector Voltage	-350 Vdc.
Heater-Cathode Potential	± 45 Volts

TYPICAL OPERATION

Resonator or Shell Voltage	300 Volts DC
Frequency	5100 - 5900 MC
Reflector Voltage (Mode A) Max. P.O.	
5100 MC	-85 to -145 Volts DC
5900 MC	-135 to -205 Volts DC
Power Output (Mode A) 5100 to 5900 MC	70 mW minimum
	95 mW Average
Resonator Current	30 mA DC
Reflector Current	7 uA Max
Electronic Tuning (P.O./2) 5100 to 5900 MC	30 MC Min.
Temperature Coefficient	±.05 to [illegible] Mc/°C

MECHANICAL

See attached drawing

Cathode	Oxide coated, unipotential
Base	To fit standard octal with #4 pin enlarged to 11/64" diameter

Pin No.	1	2	4	7	8	Top Cap
Element	Shell	Heater	Output	Heater	Cathode	Reflector

Mounting	Any Position
Cooling	Freely circulating Air

RAYTHEON MFG. CO. POWER TUBE DIVISION WALTHAM, MASS.	TITLE: TUBE MOUNT 6115	DRAWING NO. B	REV.	REVISION

SPECIAL COPIES	
COPIES	STATION
2	116
1	117

OUTLINE DRAWING OF 6115 TUBE MOUNT

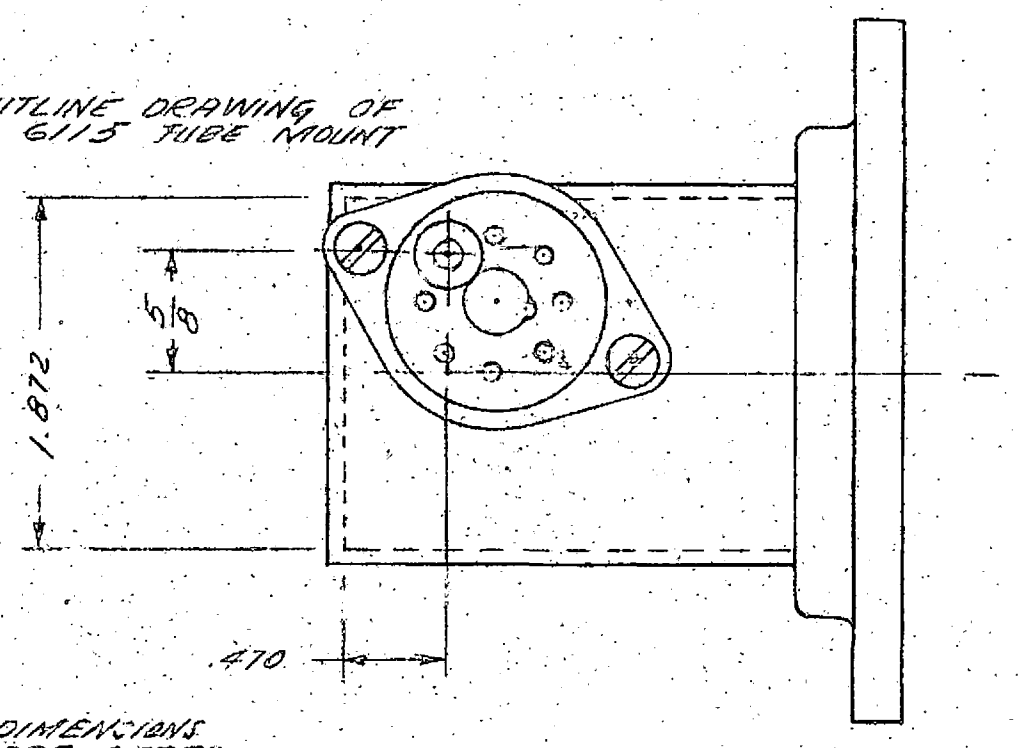

NOTE. ALL DIMENSIONS SHOWN ARE AFTER PLATING.

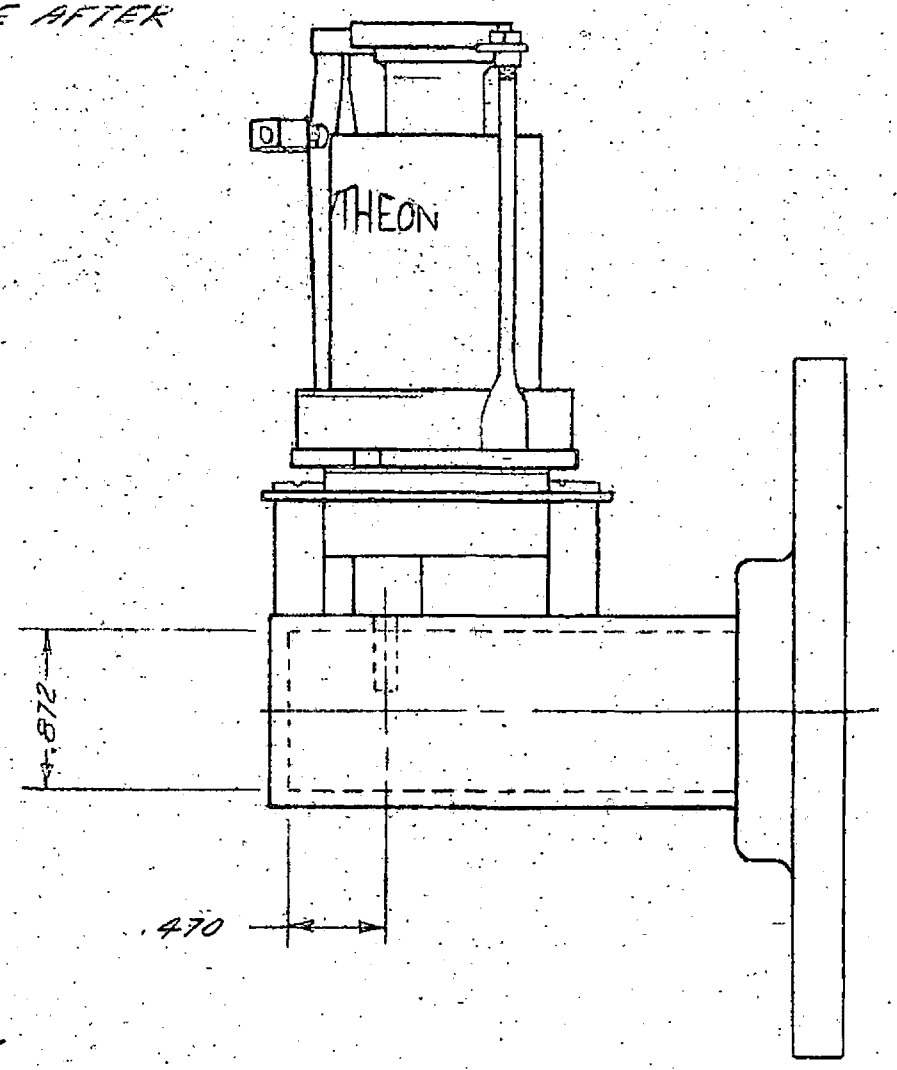

TENTATIVE SPECIFICATIONS FOR ELECTRON TUBE TYPE 6115 PROPOSED BY THE RAYTHEON MANUFACTURING COMPANY

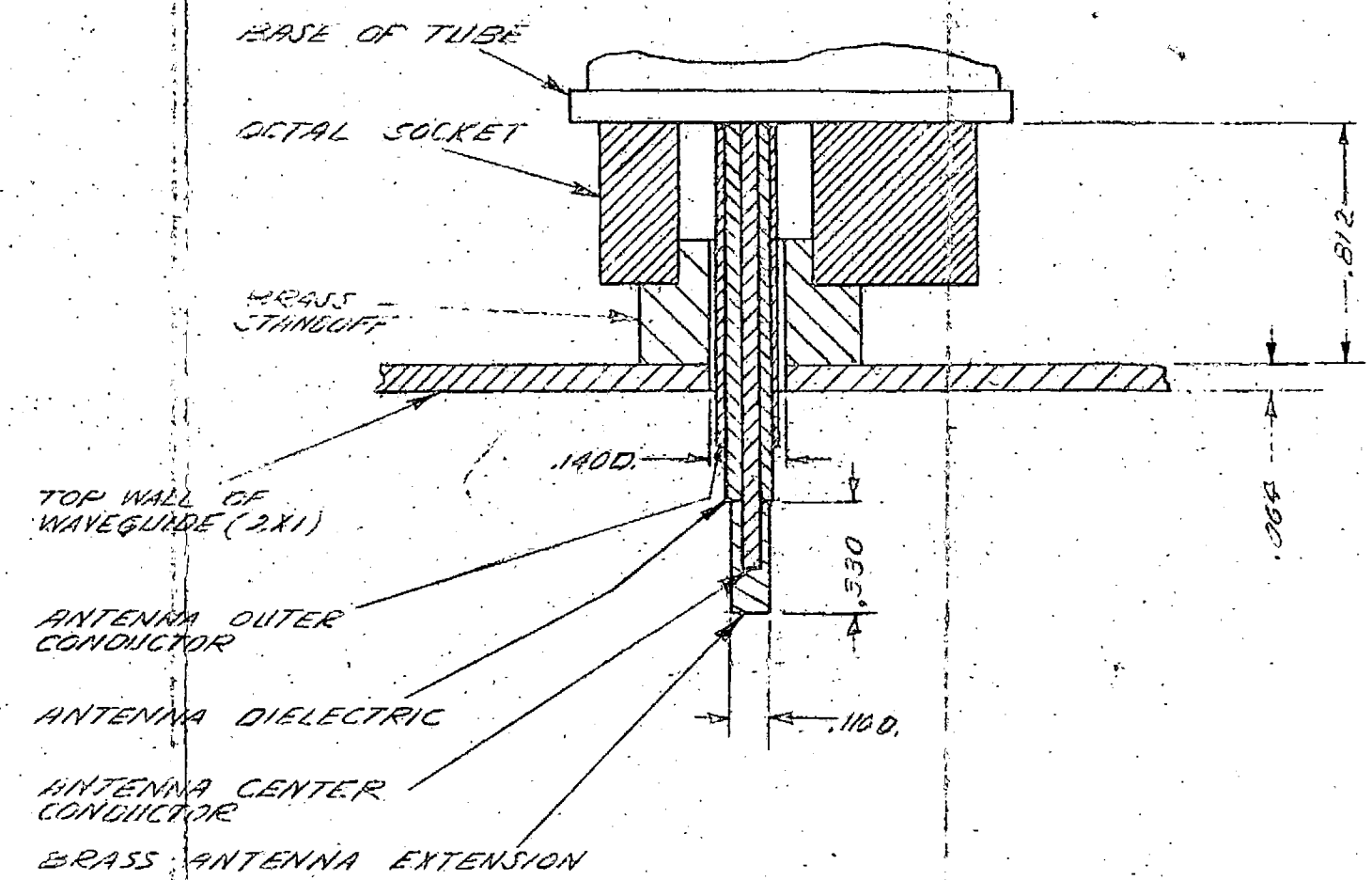

DETAIL OF 6115 TUBE MOUNT

COPIES	TUBE TYPE

FOLDER

COPIES

PROCESS SPEC.

FORM T-720-E-5-15-50

Spaulding-Moss Co., Boston, Mass. Record

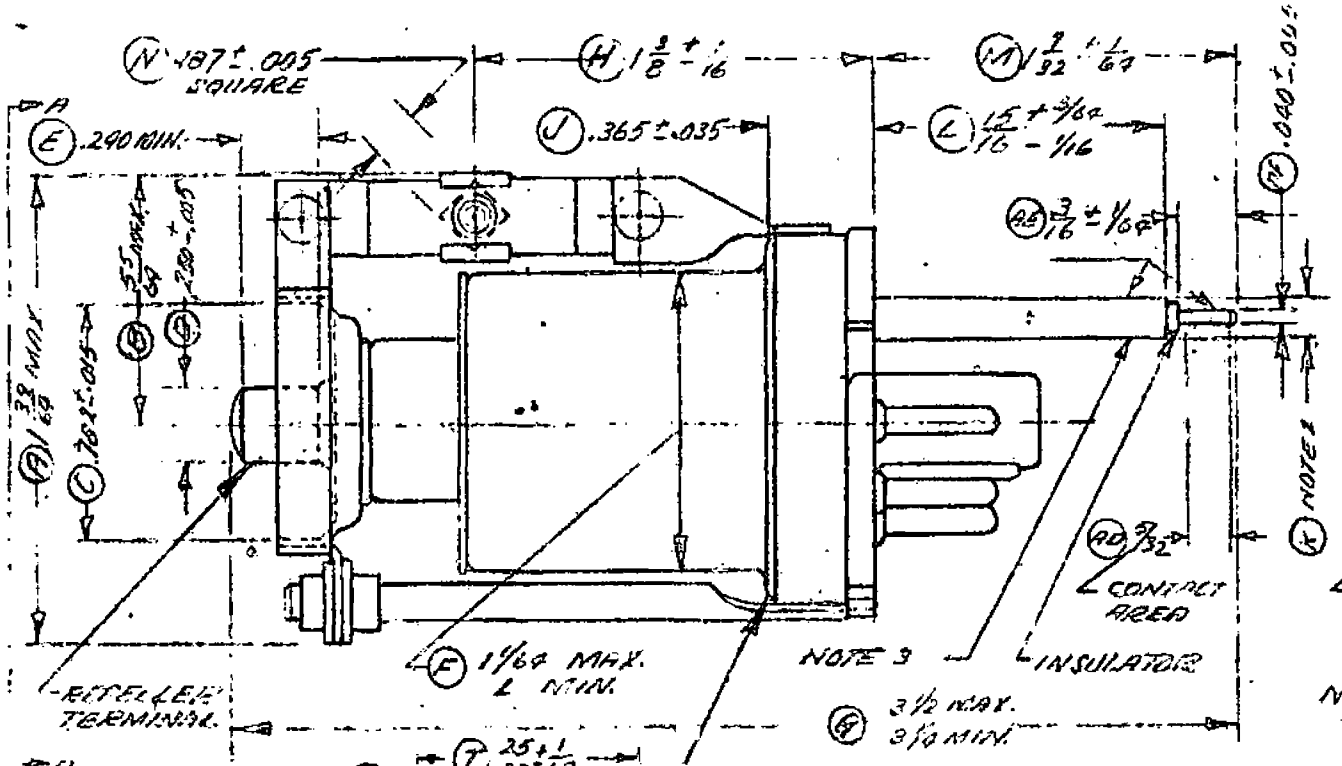

TYPE NO.	DIM.
726A	.190 ± .002
726B	.190 ± .002
726C	.190 ± .002
2X26	.190 ± .005
2X29	.190 ± .005

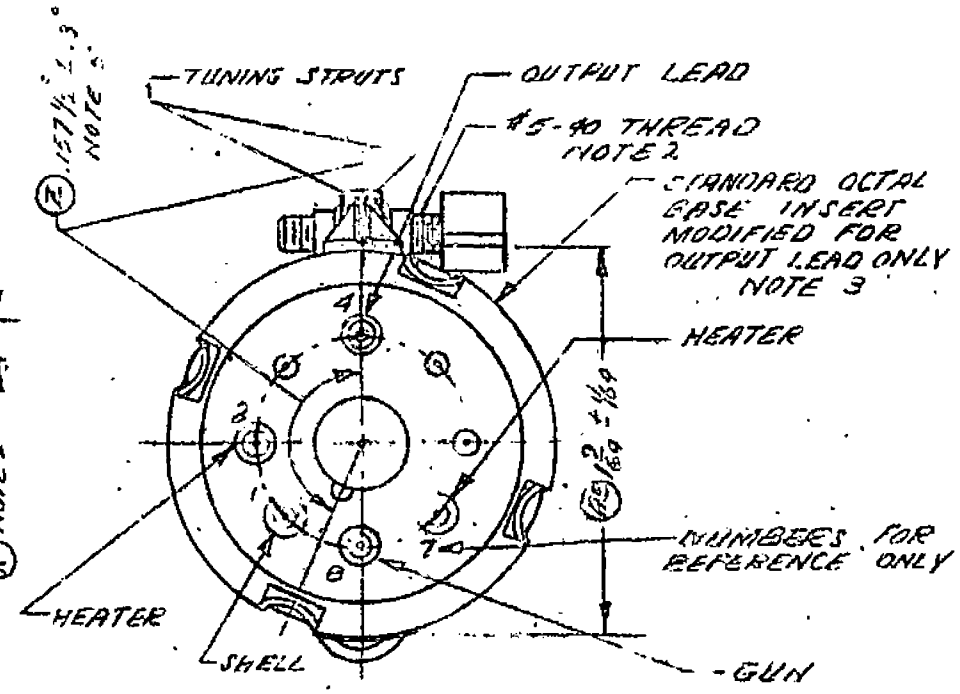

NOTE 2 - THE TUNING SCREW SHALL BE LUBRICATED WITH DIXIAG OR EQUIVALENT NON-CORROSIVE LUBRICANT. IT SHALL BE CAPABLE OF BEING OPERATED SMOOTHLY THROUGH ITS ENTIRE RANGE WITHOUT PERCEPTIBLE BINDING.

NOTE 3 - NICKEL (30 M.S.I. SILVER PLATE PERMISSIBLE).

NOTE 4 - THIS BASE SHALL BE CAPABLE OF BEING INSERTED IN A GAGE 1 7/32 THICK HAVING 4 HOLES 1/8 DEEP FROM THE TOP OF GAGE WHOSE DIAMETERS ARE .103 FOR THE CONTACT PINS. REMAINING PORTION OF HOLE TO BE CLEARANCE, APPROXIMATELY 1/64 LARGER IN DIAMETER AND A FIFTH HOLE WHOSE DIAMETER .160-1 1/32 DEEP FOR THE OUTPUT LEAD. ALL HOLES LOCATED ON THE TRUE CENTERS. ALSO A CENTER HOLE HAVING THE CONTOUR OF THE PILOT BUT WITH A CLEARANCE OF .002 OVER THE MAXIMUM DIAMETER.

NOTE 5 - APPLIES TO CENTERLINE PASSING THROUGH CENTER OF OUTPUT LEAD AND MIDWAY BETWEEN TUNING STRUTS

NOTE 6 - SHALL BE CONCENTRIC WITH EACHOTHER WITHIN .010

TYPE TEST FOLLOWING: C, E, T, V, W, X, Y, AB AND NOTE 3
DESIGN TEST FOLLOWING: A, B, D, F, G, H, R, S, U, AE
PRODUCTION TEST ALL OTHER DIMENSIONS AND NOTES.

OUTLINE DRAWING

RAYTHEON

TYPE 6