Electronic TUBES

6111
TWIN TRIODE

Five-Star Tube
★ ★ ★ ★ ★

FOR GENERAL-PURPOSE AMPLIFIER APPLICATIONS

8-LEAD SUBMINIATURE
MEDIUM MU

SHOCK, VIBRATION RATINGS
HEATER-CYCLING RATING

DESCRIPTION AND RATING

The 6111 is a subminiature medium-mu twin triode for use in general-purpose amplifier applications. Each section has an individual cathode and is electrically independent. The tube may also be used as a combined oscillator and mixer in high-frequency circuits.

The 6111 is a special-quality tube intended for use in critical industrial and military applications in which operational dependability is of primary importance. Features of the tube include a high degree of mechanical strength and a heater-cathode construction capable of withstanding many-thousand cycles of intermittent operation. When used in on-off control applications, the tube will maintain its emission capabilities after long periods of operation under cutoff conditions.

GENERAL

ELECTRICAL

Cathode—Coated Unipotential

Heater Voltage, AC or DC	6.3±5%	Volts
Heater Current	0.3	Amperes

Direct Interelectrode Capacitances

	With Shield*	Without Shield	
Grid to Plate, Each Section	1.4	1.5	μμf
Input, Each Section	2.1	1.9	μμf
Output, Section 1	1.3	0.28	μμf
Output, Section 2	1.4	0.32	μμf
Grid to Grid, maximum	0.010	0.011	μμf
Plate to Plate, maximum	0.3	0.5	μμf

*With external shield of 0.405-inch inside diameter connected to cathode of section under test.

MECHANICAL

Mounting Position—Any
Envelope—T-3, Glass
Base—E8-10, Subminiature Button 8-Lead

BASING DIAGRAM

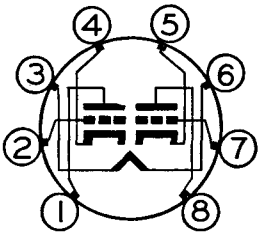

RETMA 8DG

TERMINAL CONNECTIONS

Lead 1—Plate (Section 2)
Lead 2—Grid (Section 2)
Lead 3—Heater
Lead 4—Cathode (Section 2)
Lead 5—Cathode (Section 1)
Lead 6—Heater
Lead 7—Grid (Section 1)
Lead 8—Plate (Section 1)

PHYSICAL DIMENSIONS

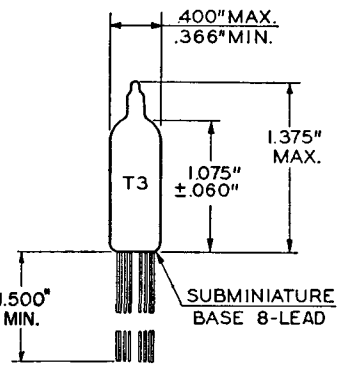

RETMA 3-1

GENERAL ELECTRIC

Supersedes ET-T1104 dated 8-54

MAXIMUM RATINGS

ABSOLUTE MAXIMUM VALUES, EACH SECTION

Plate Voltage	165	Volts
Negative DC Grid Voltage	55	Volts
Plate Dissipation	0.95	Watts
DC Plate Current	22	Milliamperes
DC Grid Current	5.5	Milliamperes
Heater-Cathode Voltage		
Heater Positive with Respect to Cathode	200	Volts
Heater Negative with Respect to Cathode	200	Volts
Grid Circuit Resistance	1.1	Megohms
Bulb Temperature at Hottest Point	220	C

CHARACTERISTICS AND TYPICAL OPERATION

CLASS A_1 AMPLIFIER, EACH SECTION

Plate Voltage	100	Volts
Cathode-Bias Resistor	220	Ohms
Amplification Factor	20	
Plate Resistance, approximate	4000	Ohms
Transconductance	5000	Micromhos
Plate Current	8.5	Milliamperes
Grid Voltage, approximate		
Ib = 10 Microamperes	−9.0	Volts

CLASS A RESISTANCE-COUPLED AMPLIFIER

EACH SECTION

LOW IMPEDANCE DRIVE (APPROXIMATELY 200 OHMS)

R_L	R_{gf}	Ebb = 90 Volts			Ebb = 150 Volts			Ebb = 225 Volts		
		R_k	E_o	Gain	R_k	E_o	Gain	R_k	E_o	Gain
0.10	0.10	2400	8.4	13	2100	16	14	1900	25	15
0.10	0.24	3100	12	14	2800	22	15	2600	34	16
0.24	0.24	6200	10	14	5600	19	15	5200	30	16
0.24	0.51	7800	13	14	7200	25	15	7000	38	15
0.51	0.51	14000	11	13	13000	21	14	12000	32	15
0.51	1.0	19000	14	13	17000	26	14	16000	40	15

HIGH IMPEDANCE DRIVE (APPROXIMATELY 100K OHMS)

R_L	R_{gf}	Ebb = 90 Volts			Ebb = 150 Volts			Ebb = 225 Volts		
		R_k	E_o	Gain	R_k	E_o	Gain	R_k	E_o	Gain
0.10	0.10	3200	11	13	2500	21	14	2100	32	15
0.10	0.24	4200	15	14	3400	28	15	3000	43	15
0.24	0.24	8400	13	13	6800	24	14	6000	36	15
0.24	0.51	10000	16	13	8700	29	15	7800	45	15
0.51	0.51	17000	13	13	15000	25	14	13000	38	15
0.51	1.0	21000	17	13	19000	30	14	17000	47	15

Notes:

1. E_o is maximum RMS voltage output for approximately five percent total harmonic distortion.
2. Gain is measured for an output voltage of two volts RMS.
3. R_k is in ohms; R_L and R_{gf} are in megohms.
4. Coupling capacitors (C) should be selected to give desired frequency response. R_k should be adequately by-passed.

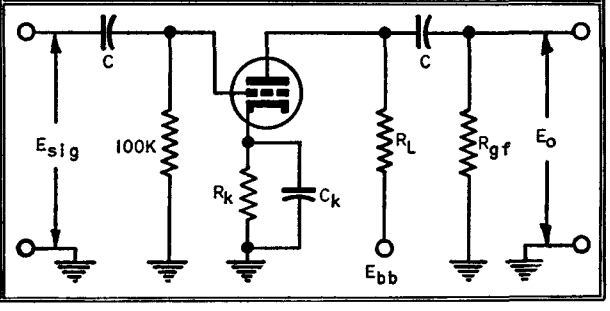

CHARACTERISTICS LIMITS

		Minimum	Maximum	
Heater Current				
Ef = 6.3 volts	Initial	280	320	Milliamperes
	500-Hr	276	328	Milliamperes
Plate Current, Each Section				
Ef = 6.3 volts, Eb = 100 volts, Rk = 220 ohms (by-passed)	Initial	6.0	11	Milliamperes
Plate Current Difference between Sections				
Difference between plate currents for each section at Ef = 6.3 volts, Eb = 100 volts, Rk = 220 ohms (by-passed)	Initial	....	2.0	Milliamperes
Transconductance (1), Each Section				
Ef = 6.3 volts, Eb = 100 volts, Rk = 220 ohms (by-passed)	Initial	4100	5900	Micromhos
Transconductance Change with Heater Voltage, Each Section				
Difference between Transconductance (1) and Transconductance at Ef = 5.7 volts (other conditions the same) expressed as a percentage of Transconductance (1)	Initial	....	15	Percent
	500-Hr	....	15	Percent
Transconductance Change with Operation, Each Section				
Difference between Transconductance (1) initially and after operation expressed as a percentage of initial value	500-Hr	....	20	Percent
Average Transconductance Change with Operation, Each Section				
Average of values for "Transconductance Change with Operation"	500-Hr	....	15	Percent
Amplification Factor, Each Section				
Ef = 6.3 volts, Eb = 100 volts, Rk = 220 ohms (by-passed)	Initial	17	23	
Plate Current Cutoff, Each Section				
Ef = 6.3 volts, Eb = 100 volts, Ec = −9.0 volts	Initial	....	100	Microamperes
Interelectrode Capacitances				
Grid to Plate (g to p), Each Section	Initial	1.2	1.8	μμf
Input (g to k + h), Each Section	Initial	1.4	2.4	μμf
Output (p to k + h), Section 1	Initial	0.20	0.36	μμf
Output (p to k + h), Section 2	Initial	0.22	0.42	μμf
Grid to Grid (g to g)	Initial	....	0.011	μμf
Plate to Plate (p to p)	Initial	....	0.50	μμf
Measured without external shield				
Negative Grid Current, Each Section				
Ef = 6.3 volts, Eb = 100 volts, Rk = 220 ohms (by-passed), Rg = 1.0 meg	Initial	....	0.3	Microamperes
	500-Hr	....	0.9	Microamperes
Heater-Cathode Leakage Current				
Ef = 6.3 volts, Ehk = 100 volts				
Heater Positive with Respect to Cathode	Initial	....	5.0	Microamperes
	500-Hr	....	10	Microamperes
Heater Negative with Respect to Cathode	Initial	....	5.0	Microamperes
	500-Hr	....	10	Microamperes
Interelectrode Leakage Resistance				
Ef = 6.3 volts. Polarity of applied d-c interelectrode voltage is such that no cathode emission results.				
Grid (Each Section) to All at 100 Volts DC	Initial	100	....	Megohms
	500-Hr	50	....	Megohms
Plate (Each Section) to All at 300 Volts DC	Initial	100	....	Megohms
	500-Hr	50	....	Megohms
Vibrational Noise Output Voltage, RMS				
Ef = 6.3 volts, Ebb = 100 volts, Rk = 220 ohms (by-passed), R_L = 10,000 ohms, Vibrational acceleration = 15 G at 40 cps	Initial	....	50	Millivolts
Grid Emission Current, Each Section				
Ef = 7.5 volts, Eb = 100 volts, Ecc = −9.0 volts, Rg = 1.0 meg	Initial	....	0.5	Microamperes
Pulse Cathode Current				
Ef = 6.0 volts, Pulse of 25 microseconds duration, 200-cycle repetition rate, and 50 volt amplitude is applied to plate and grid tied together. Pulse cathode current is measured for each section with opposite section floating	Initial	300	....	Milliamperes

SPECIAL TESTS AND RATINGS

Stability Life Test
Statistical sample operated for one hour to evaluate and control initial variations in transconductance.

Survival Rate Life Test
Statistical sample operated for one hundred hours to evaluate and control early-life electrical and mechanical inoperatives.

Heater-Cycling Life Test
Statistical sample operated for 2000 cycles to evaluate and control heater-cathode defects. Conditions of test include Ef = 7.0 volts cycled for one minute on and four minutes off, Eb = Ec = 0 volts, and Ehk = 140 volts RMS.

Shock Rating—450 G
Statistical sample subjected to five impact accelerations of 450 G in each of four different positions. The accelerating forces are applied by the Navy-type, High Impact (flyweight) Shock Machine for Electronic Devices or its equivalent.

Fatigue Rating—2.5 G
Statistical sample subjected to vibrational acceleration of 2.5 G for 32 hours in each of three different positions. The sinusoidal vibration is applied at a fixed frequency between 25 and 60 cycles per second.

Altitude Rating—60,000 Feet
Statistical sample subjected to pressure of 55 millimeters of mercury to evaluate and control arcing and corona.

Note: The conditions for some of the indicated tests have deliberately been selected to aggravate tube failures for test and evaluation purposes. In no sense should these conditions be interpreted as suitable circuit operating conditions.

In the design of military equipment employing this tube, reference should be made to the appropriate MIL-E-1 specification.

AVERAGE PLATE CHARACTERISTICS

EACH SECTION

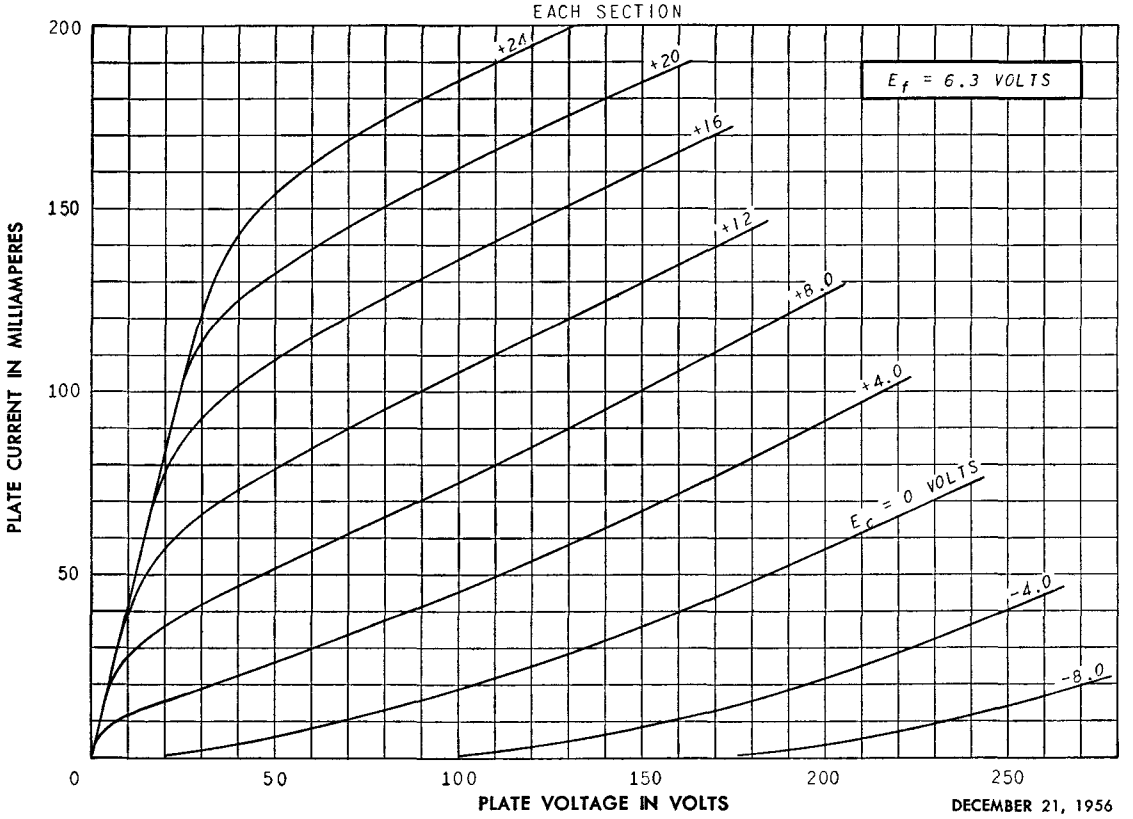

DECEMBER 21, 1956

AVERAGE PLATE CHARACTERISTICS

EACH SECTION

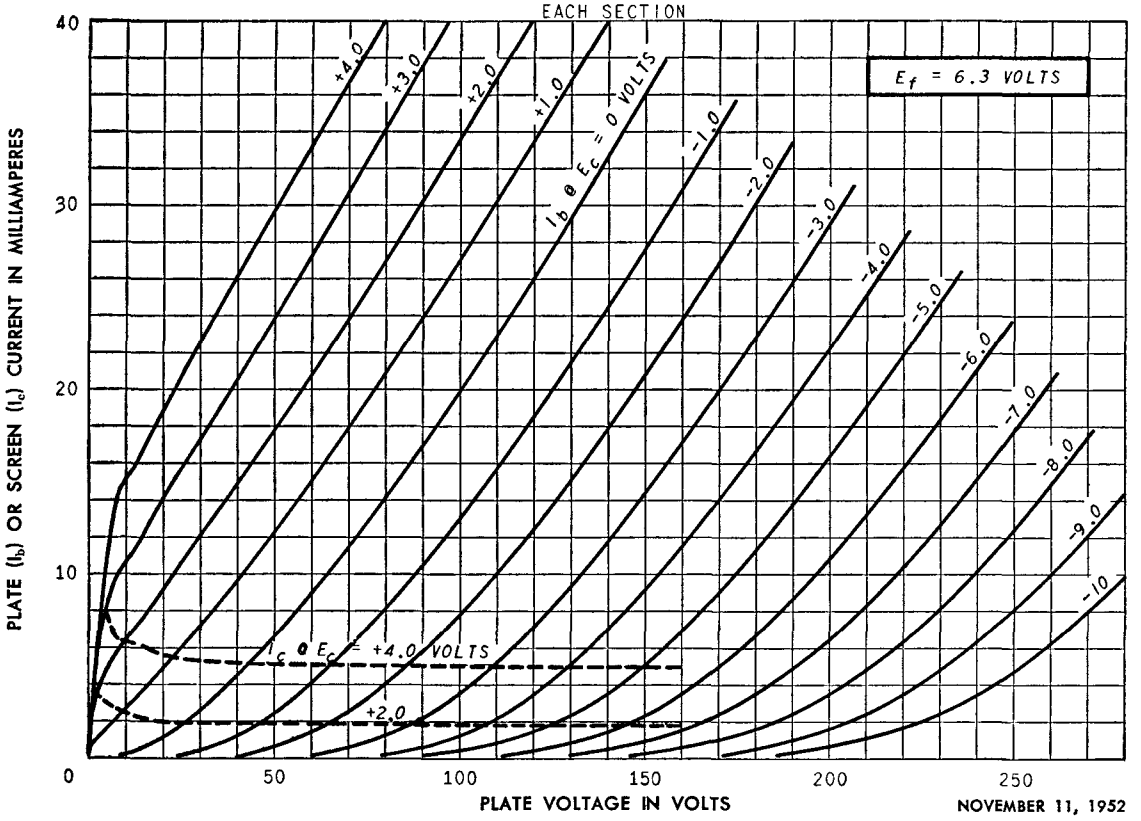

NOVEMBER 11, 1952

AVERAGE CHARACTERISTICS

EACH SECTION

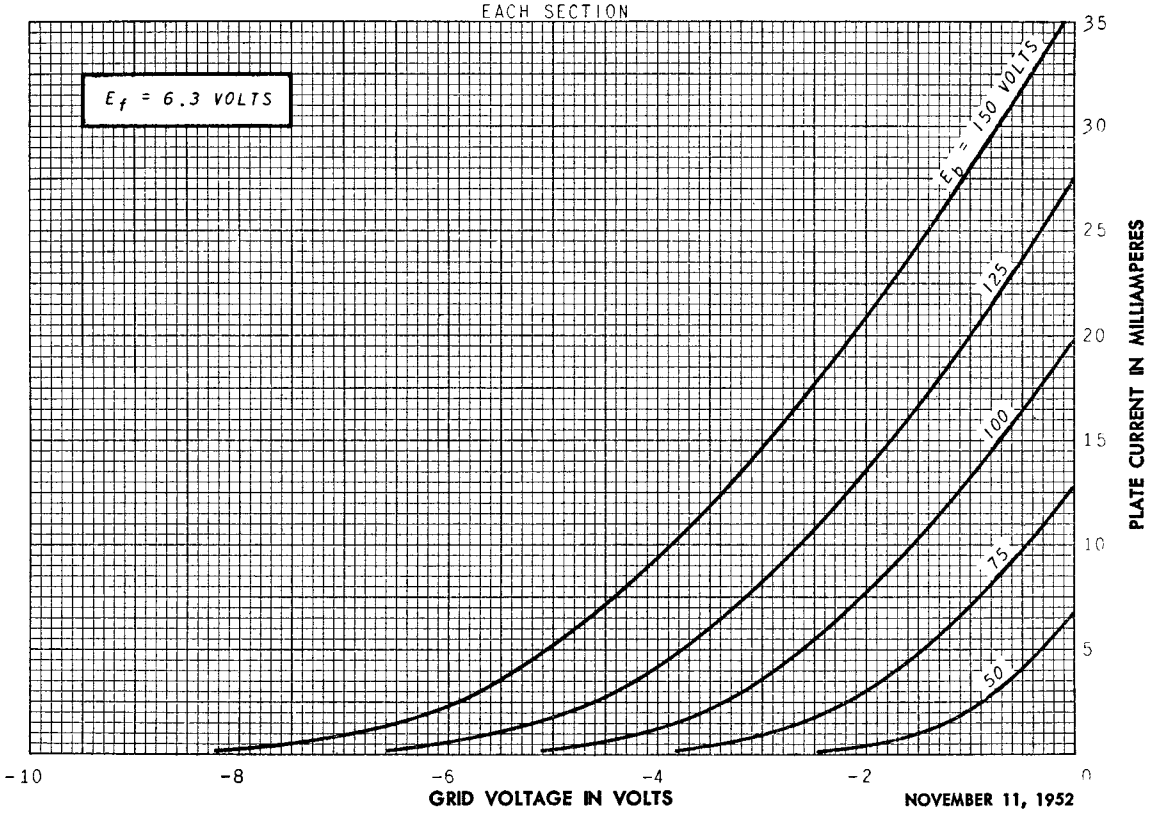

NOVEMBER 11, 1952

AVERAGE CHARACTERISTICS

EACH SECTION

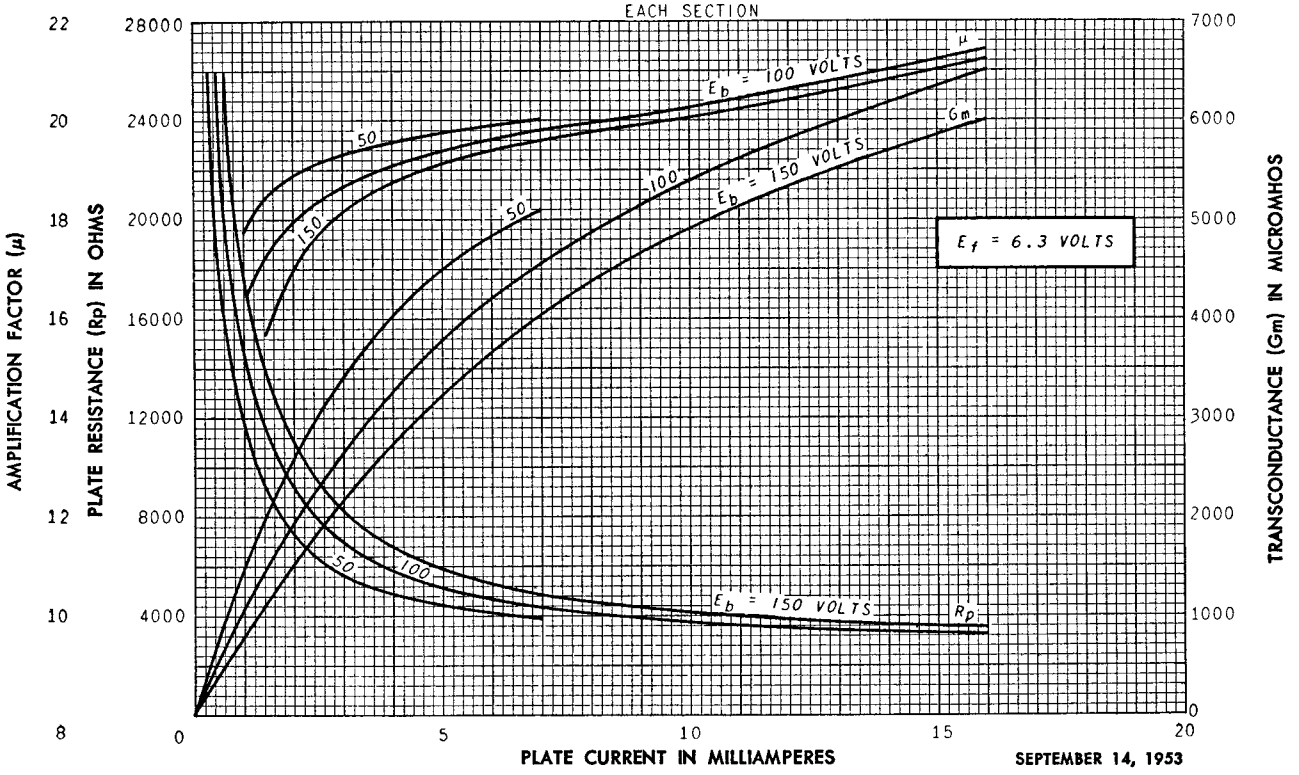

SEPTEMBER 14, 1953

PRINTED IN U.S.A.