HIGH-VACUUM DIODE 6103

Forced-Air Cooled Type
Small Size

20 Kv. Peak Inverse Voltage
Light Weight

The high-vacuum diode type 6103 is designed for use in rectifier applications involving peak inverse voltages up to 20 kv. The maximum average current is 150 ma. and the peak current is 900 ma. The 6103 has a thoriated tungsten filament and is intended for forced-air cooling installation.

GENERAL DATA

Electrical:

	Min.	Center	Max.	
Filament Type (See Note II)		Thoriated Tungsten		
Filament Voltage	4.75	5.0	5.25	Volts
Filament Current at center volts	6.8	7.2	7.6	Ampere
Filament Heating Time	3	---	---	Seconds
Tube Voltage Drop (Ib = 150 ma)		300		Volts

Mechanical:

Mounting (See Note I)	Special
Mounting Position	Vertical, plate up or down
Cooling (See Note III)	Forced Air

Air flow of 50 cu. ft. per min. is required to be directed into the open side of the radiator.

Static Back Pressure	less than 0.1 inches water
Temperature of Input Air	45 max. °C
Radiator Temperature	200 max. °C
Seal Temperature	180 max. °C
Net Weight	8-1/2 ounces

MAXIMUM RATINGS
Absolute Values

Rectifier Service:

Peak Inverse Voltage	20	max.	Kv.
Peak Plate Current	.900	max.	Ampere
Average Plate Current	.150	max.	Ampere
Average Plate Dissipation	140	max.	Watts

TYPICAL OPERATION

Single-Phase, Full Wave:

Full Transformer Secondary Voltage (Erms)	14100	Volts
D-C Output Voltage to Filter	6300	Volts
D-C Output Current	.300	Ampere

Single-Phase, Full-Wave Bridge:

Transformer Secondary Voltage (Erms)	14100	Volts
D-C Output Voltage to Filter	12700	Volts
D-C Output Current	.300	Ampere

Three-Phase, Half-Wave:

Transformer Secondary Voltage (Erms) Line to Neutral . .	8200 Volts
D-C Output Voltage to Filter	9500 Volts
D-C Output Current	.450 Ampere

Three-Phase, Double-Y Parallel (See Note V):

Transformer Secondary Voltage (Erms) Line to Neutral . .	7000 Volts
D-C Output Voltage to Filter	8300 Volts
D-C Output Current	.900 Ampere

Three-Phase, Full-Wave Bridge:

Transformer Secondary Voltage (Erms) Line to Neutral . .	8200 Volts
D-C Output Voltage to Filter	19000 Volts
D-C Output Current	.450 Ampere

NOTES

I. Mounting
The 6103 should be supported by the plate terminal so that the axis of the tube is vertical with the plate terminal either up or down. Flexible leads should be provided for the filament connections to prevent strain on the tube seals.

II. Filament
The filament of the 6103 is designed for a-c operation from a transformer secondary winding. The filament voltage measured at the tube terminals should not vary more than 5% from the rated value, including the effects of power-supply regulation. The filament voltage should be applied at least 3 seconds before plate voltage is applied. Safety precautions should be observed when the filament voltage is measured in cases where the filament is at a high potential.

III. Cooling
Cooling air flow should start with the application of any voltages and should continue until all voltages are removed.

IV. Filter Input
Filter circuits of the condenser-input type may be employed; the capacity of the condenser must be such that the peak plate current rating will not be exceeded. Choke-input filters may be preferred in order to obtain the largest average d-c output current under the most favorable conditions.

V. No Load
Under no-load conditions, the peak inverse voltage across the tube will rise 15%.

VI. General
The allowable load currents shown under "Typical Operation" are for ideal conditions; circuit regulation and other factors will reduce these currents in practical installations.
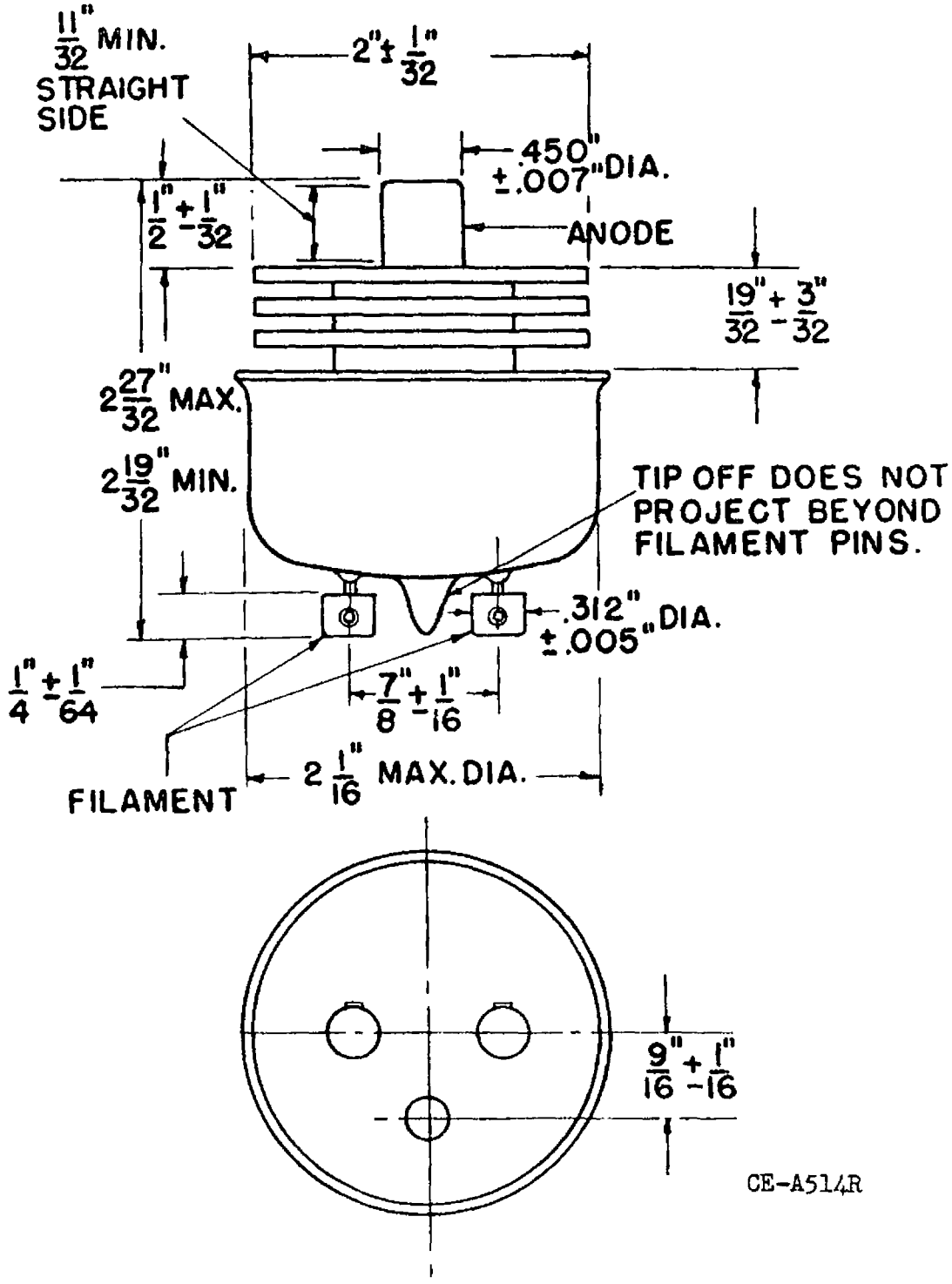
6103 OUTLINE