from RTMA release #937, Jan. 4, 1951

TYPE 6043

Velocity Modulation Reflex Oscillator Type QK-159

General Characteristics

Microwave oscillator employing self-contained tunable cavity. Oxide coated, unipotential cathode.

Heater Voltage	6.3	Volts AC-DC
Heater Current	.65	Amperes

Maximum Ratings

Heater Voltage	6.3	± 10% Volts
Grid #1	300	Volts DC
Grid #2 and #3	300	Volts DC
Cathode Current	45	Ma DC
Reflector Voltage	0 to -300	Volts DC
Frequency Range	400	Mc.

Typical Operation

Grid #1	300	Volts DC
Grid #2 and #3	300	Volts DC
Reflector Voltage	-100 to -175	Volts DC
Cathode Current	20	Ma DC
Frequency Range	2950 - 3275	Mc.
Power Output	150	Mw.
Electrical Tuning Range between 1/2 power points	20	Mc.
Maximum Frequency change in any 20°C range	3.0	Mc.

Mechanical

Base: Standard Intermediate Octal

Pin No:	1	2	3	6	7	Top Pin
	Shell, $G_{2\&3}$	Heater	Cathode	G_1	Heater	Reflector

Maximum Overall Dimensions	
Height	Max. 4.5"
Diameter - (a)	Max. with tuning screws turned out 3-3/16"
- (b)	Max. tube dimension with no tuning screws 1-15/16"
Mounting	Any position
Cooling	Freely circulating air

OUTLINE DRAWING

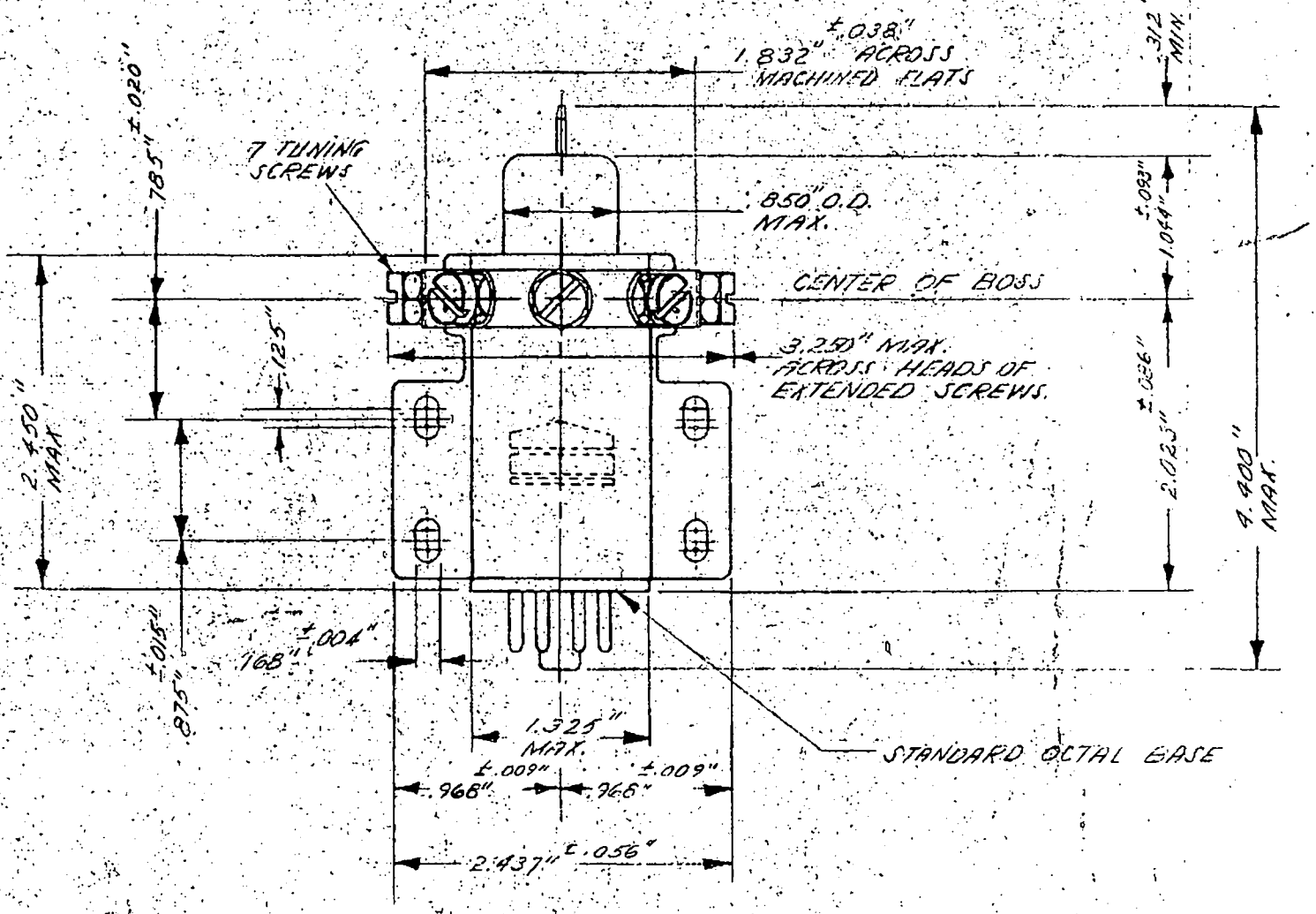

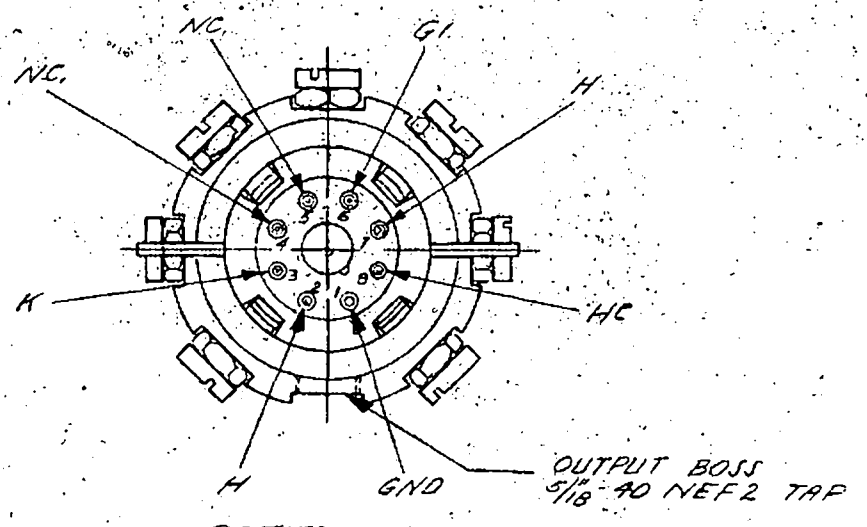

BOTTOM VIEW