DESCRIPTION AND RATING

TRANSMITTING TUBE 6039

The 6039 is a three-electrode tube designed for use as a grounded-grid class B radio-frequency amplifier and class C radio-frequency amplifier and oscillator in television and FM services. The anode is water-cooled and capable of dissipating 7 kilowatts. The cathode is a thoriated-tungsten filament. Maximum ratings apply up to 220 megacycles.

Utilizing the same general design principles that have proved so successful in the operation of the GL-9C24, this tube's predecessor, the 6039 has several features that enable it to give improved service over the older tube in both the television and FM bands. A material reduction in power cost results from use of a thoriated-tungsten filament which requires only 25.8 percent of the amount of power required. Higher output can be obtained - A pair of 6039's are capable of 10 kilowatts output in television service and 25 kilowatts in FM. Other features of the tube are low lead inductance, large terminal-contact areas, and silver-plated metal parts to reduce radio-frequency losses. In addition, neutralization is unnecessary in a properly designed circuit, and the problem of filament starting is eliminated since special precautions to limit the filament starting current are not required.

The 6039 can be substituted for the GL-9C24 with a saving of 74.2 percent in filament power providing modification of the filament circuit and minor mechanical changes are made.

TECHNICAL INFORMATION

These data are for reference only. For design information see the Specifications.

GENERAL

Electrical Data	Minimum	Bogey	Maximum	
Filament Voltage	4.8	5.0	5.2	Volts
Filament Current at 5 Volts	74	78	82	Amperes
Amplification Factor, I_b = 1.0 Amp, E_c = 50V	17	21	25	
Interelectrode Capacitances				
Grid-plate	13.8	15.7	17.6	uuf
Grid-filament	20	24	28	uuf
Plate-filament*	0.34	0.47	0.60	uuf

Mechanical Data		
Mounting Position - Vertical, Anode Down		
Type of Cooling - Water and Forced Air		
Water Flow on Anode	11	GPM
Maximum Outgoing Water Temperature	70	C
Air Flow to Center Filament Terminal	7	CFM
Maximum Glass Temperature§	150	C
Gasket - JETEC Type No. 19		
Net Weight, approximate	3.5	Pounds

MAXIMUM RATINGS AND TYPICAL OPERATING CONDITIONS

Radio-frequency Power Amplifier - Class B Video Service
Synchronizing peak conditions per tube in a grounded-grid circuit - 5 megacycles bandwidth

Maximum Ratings, Absolute Values		
D-c Plate Voltage	6000 Max	Volts
D-c Plate Current	2.25 Max	Amperes

GENERAL ELECTRIC

from RTMA release #948, March 2, 1951

MAXIMUM RATINGS AND TYPICAL OPERATING CONDITIONS (Cont'd)

Radio-frequency Power Amplifier - Class B Video Service (Cont'd)
Synchronizing peak conditions per tube in a grounded-grid circuit - 5 megacycles bandwidth

Maximum Ratings, Absolute Values (Cont'd)			
Plate Input		13.5 Max	Kilowatts
Plate Dissipation		7 Max	Kilowatts
Typical Operation			
D-c Plate Voltage	5000	5000	Volts
D-c Grid-No. 1 Voltage	270	300	Volts
Peak R-f Grid-No. 1 Voltage	700	580	Volts
D-c Plate Current	2.2	2.1	Amperes
D-c Grid-No. 1 Current, approximate	0.21	0.17	Ampere
Driving Power, approximate†	1300	1060	Watts
Power Output, approximate†	5.6	4.9	Kilowatts

Radio-frequency Power Amplifier and Oscillator - Class C Telegraphy
Key-down conditions per tube without amplitude modulation‡

Maximum Ratings, Absolute Values		
D-c Plate Voltage	7500 Max	Volts
D-c Grid-No. 1 Voltage	1000 Max	Volts
D-c Plate Current	2.25 Max	Amperes
D-c Grid-No. 1 Current	0.400 Max	Ampere
Plate Input	16 Max	Kilowatts
Plate Dissipation	7 Max	Kilowatts
Typical Operation, Grounded-filament Circuit		
D-c Plate Voltage	7000	Volts
D-c Grid-No. 1 Voltage	900	Volts
Peak R-f Grid-No. 1 Voltage	1540	Volts
D-c Plate Current	2.08	Amperes
D-c Grid-No. 1 Current, approximate	0.40	Ampere
Driving Power, approximate	620	Watts
Power Output, approximate	10	Kilowatts
Typical Operation, Grounded-grid Circuit		
D-c Plate Voltage	7000	Volts
D-c Grid-No. 1 Voltage	900	Volts
Peak R-f Grid-No. 1 Voltage	1540	Volts
D-c Plate Current	2.08	Amperes
D-c Grid-No. 1 Current, approximate	0.40	Ampere
Driving Power, approximate†	3.4	Kilowatts
Power Output, approximate†	12.8	Kilowatts

* Measured with a 10-inch outer diameter and 3 5/8-inch inner diameter flat shield on grid terminal.

§ Sufficient air flow must be applied to the grid-anode and grid-cathode seals to limit the temperature to this value.

† This value includes power transferred from driver to output.

‡ Modulation essentially negative may be used if the positive peak of the envelope does not exceed 115 percent of the carrier conditions.

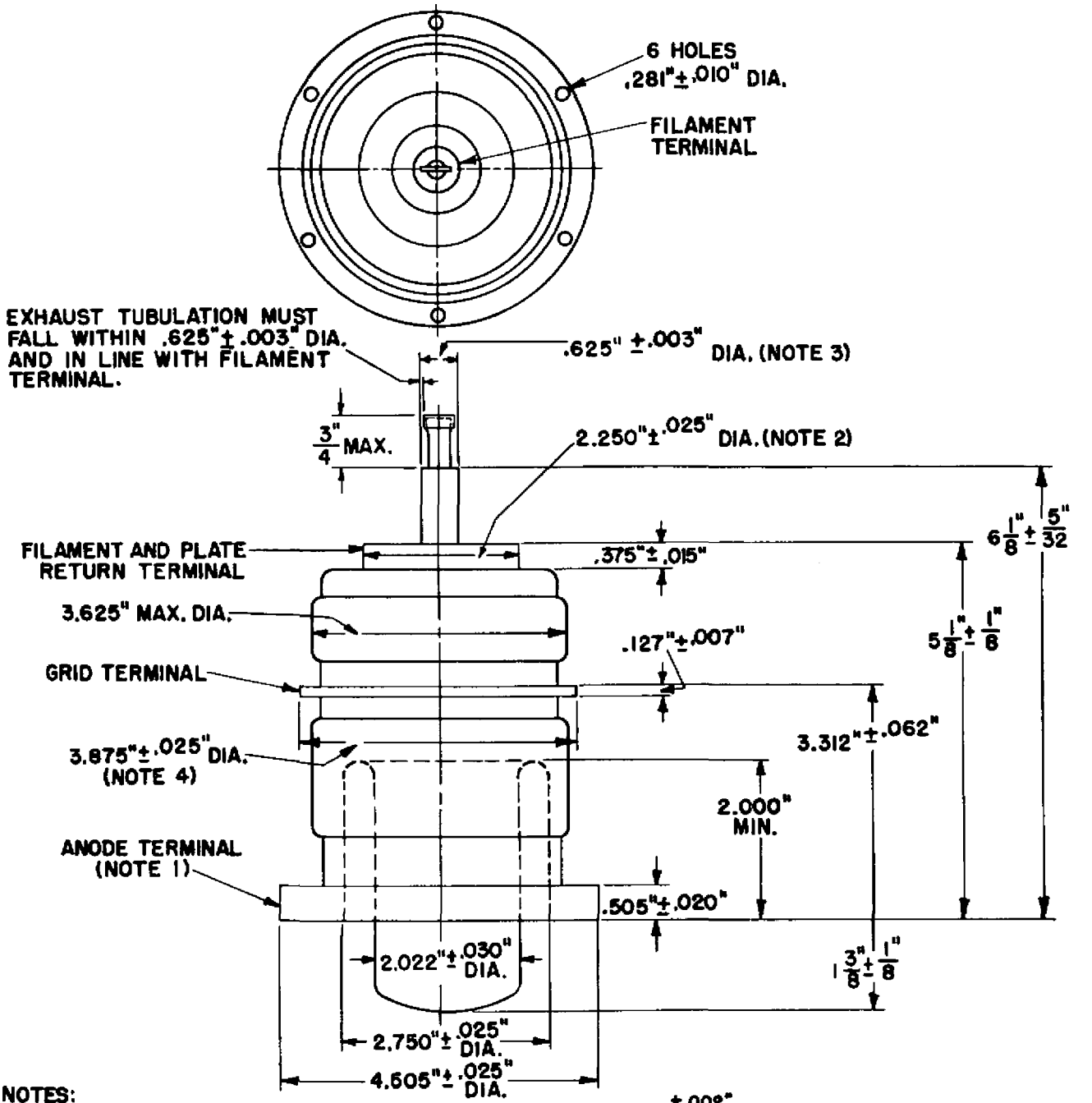

NOTES:

1. HOLES IN ANODE TERMINAL POSITIONED TO FIT SIX .250"$^{+.002"}_{-.000"}$ DIA. PINS INSERTED TO DEPTH OF FLANGE AND LOCATED ON A CIRCLE 4.000"±.003" DIA. AT ANGLES OF 60±0 DEG. 10'. HOLES NOT INDEXED WITH RESPECT TO HOLES IN FILAMENT AND PLATE-RETURN TERMINAL.
2. ECCENTRICITY .060" FROM CENTER LINE OF BOLT HOLES IN ANODE TERMINAL.
3. ECCENTRICITY .060" FROM CENTER LINE OF OUTSIDE CIRCUMFERENCE OF PLATE-RETURN TERM.
4. ECCENTRICITY .030" FROM CENTER LINE OF BOLT HOLES IN ANODE TERMINAL.

N15176AZ January 17, 1951

Outline
6039

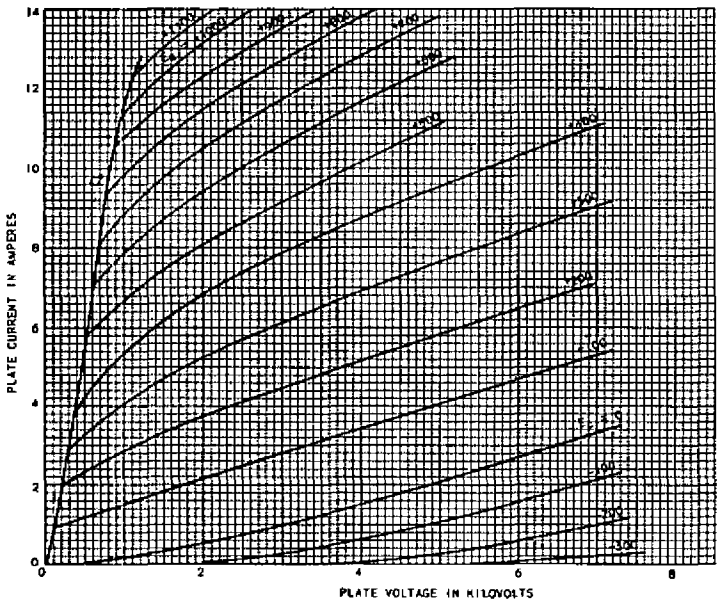

K-69087-72A415 November 22, 1950
6039
Average Plate Characteristics
E_f = 5.0 Volts

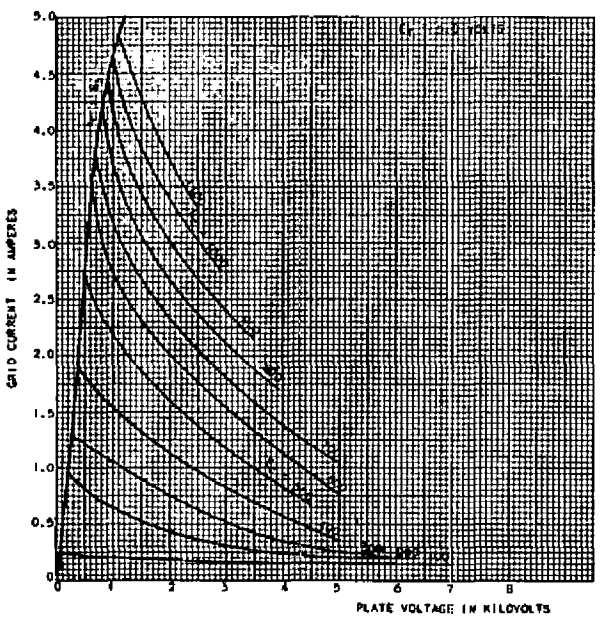

K-69087-72A416 November 22, 1950
6039
Average Grid Characteristics
E_f = 5.0 Volts

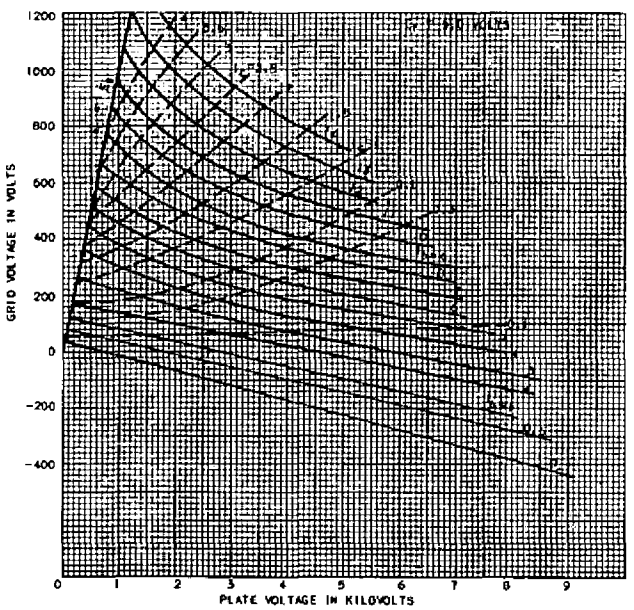

K-69087-72A368 November 14, 1950
6039
Characteristics
E_f = 5.0 Volts

GENERAL ELECTRIC

ELECTRONICS DEPARTMENT, TUBE DIVISIONS
SCHENECTADY, NEW YORK