SYLVANIA

engineering data service

SYLVANIA
6018

MECHANICAL DATA

Maximum Overall Length	2⅜ Inches
Maximum Overall Diameter	0.814 Inches

ELECTRICAL DATA

HEATER CHARACTERISTICS

Heater Voltage (AC or DC)	6.3 Volts
Heater Current	400 Ma

DIRECT INTERELECTRODE CAPACITANCES (AVERAGE)

Grid to Plate	1.90 $\mu\mu f$
Grid to Cathode	1.20 $\mu\mu f$
Plate to Cathode	0.38 $\mu\mu f$

RATINGS (Absolute Values)

Plate Dissipation	5.0 Watts	Max.
Seal Temperature	175° C	Max.
Plate Voltage (Pulsed)	1500 Volts	Max.
Operating Frequency	1750 Mc	Max.

CHARACTERISTICS

Conditions: (E_b=180 volts dc, R_k=400 ohms)

Transconductance	4500 μmhos
Amplification Factor	25
Plate Current	12.0 Ma

TYPICAL OPERATING CONDITIONS

UHF Oscillator — Plate Pulse Modulated

Peak Plate Voltage	1000 Volts
Peak Plate Current	900 Ma
Grid Voltage	0 Volts
Pulse Repetition Frequency	2000 PPS
Pulse Width	2.0 μsec.
Frequency of Operation	1000 Mc
Peak Power Output	200 Watts
Grid Voltage for I_b = 10 μa	-28 Volts

APPLICATION DATA

The Sylvania Type 6018 is designed for use as a pulse-modulated oscillator at frequencies up to 1200 mc. The 6018 has a built-in internal feedback circuit between cathode and anode and fits into a concentric circuit. A small amount of adjustable, external feedback is generally necessary in order to obtain optimum power output at any given frequency. A feedback probe between the output and input lines may be used. With plate-pulse modulation the grid may be operated at zero bias, eliminating the necessity of insulating the cathode from the grid in the input-line plunger. The folded plate and grid discs make this tube particularly adaptable to lumped constant and butterfly type circuits.

The Sylvania planar type construction features a stretched, parallel-wire grid that results in stable, uniform operation; a unique cathode design that minimizes discontinuities in the cathode structure; and, a disc-seal construction that satisfies the requirements for low lead inductance.

QUICK REFERENCE DATA

The Sylvania Type 6018 is a uhf triode designed for service as a pulse modulated oscillator at frequencies up to 1200 mc. Electrically, the Type 6018 is identical to the Type 2C36. The 6018, however, employs folded discs for both the grid and plate connectors. With plate pulsed modulation, the grid may be operated at zero bias.

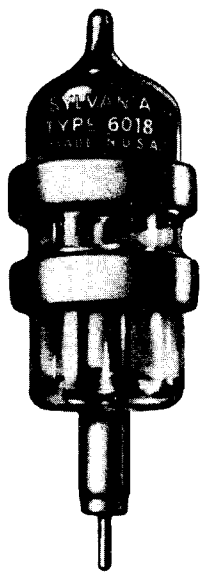

SYLVANIA ELECTRIC PRODUCTS INC.

ELECTRONICS DIVISION
WOBURN, MASS.

Prepared and Released By The
TECHNICAL PUBLICATIONS SECTION
EMPORIUM, PENNSYLVANIA

12-53-45
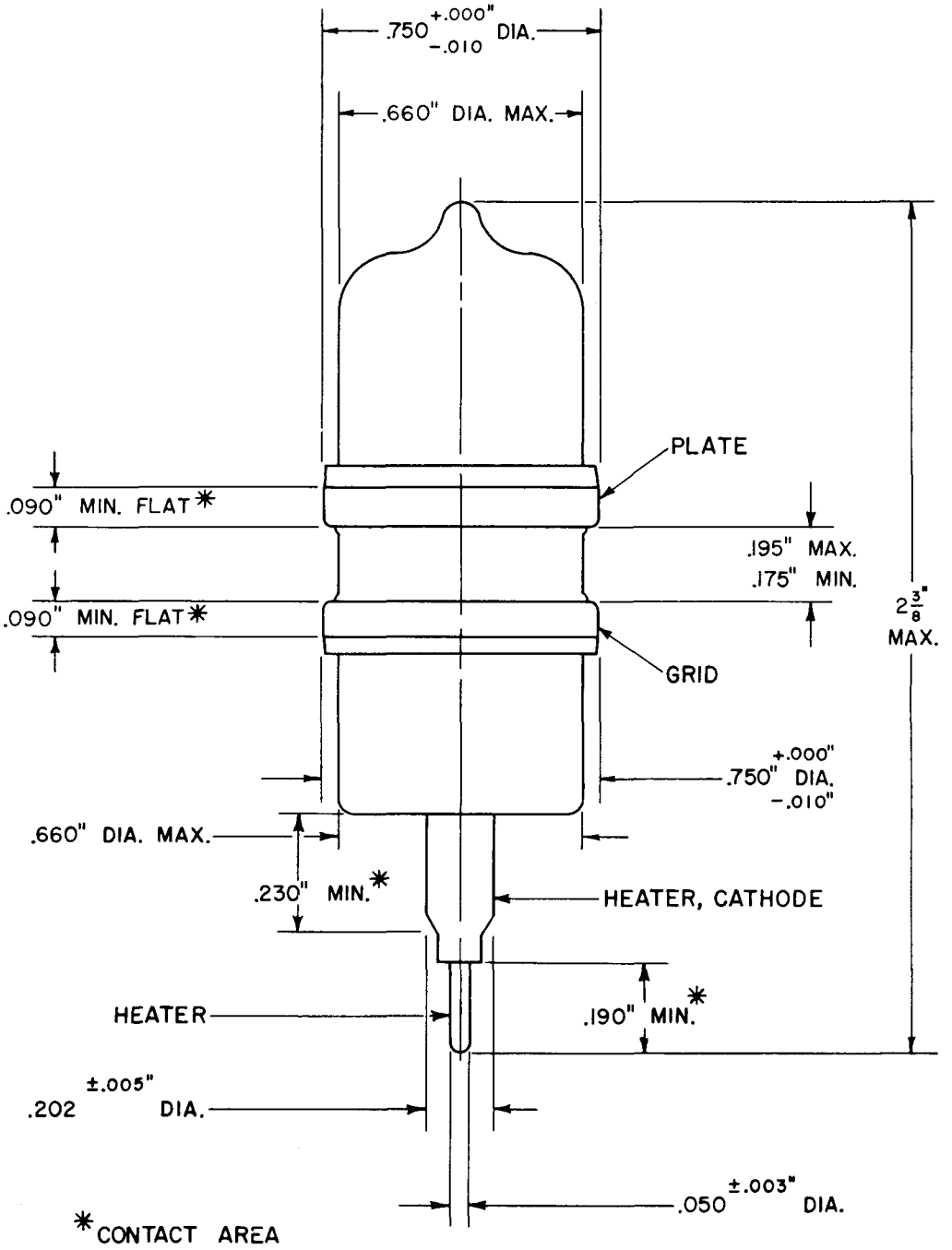
OUTLINE DRAWING