DESCRIPTION AND RATING

TRANSMITTING TUBE GL-6017

The GL-6017 is a three-electrode transmitting tube with a metal-and-ceramic envelope for use as a power amplifier or oscillator in Class B or Class C service for industrial or communications applications. This tube is designed particularly for grounded-grid operation.

The GL-6017 has an indirectly heated thoria-coated cathode, a plate dissipation of 1000 watts, and is forced-air cooled. Maximum ratings apply at frequencies up to 400 megacycles.

In Class C grounded-grid service this tube can deliver a peak power output of 1100 watts. In grounded-filament service the output is 900 watts.

The GL-6017 provides a compact triode for those applications which require the same power ratings as the four-electrode types GL-6019 and GL-6183, but where the higher frequencies at which these tubes are rated are not required.

TECHNICAL INFORMATION

GENERAL

Electrical Data	Minimum	Bogey	Maximum	
Heater Voltage*	---	10	10.5	Volts
Heater Current at Bogey Voltage	---	17	---	Amperes
Heater Starting Current	---	---	26	Amperes
Heater Cold Resistance	---	0.049	---	Ohms
Cathode Heating Time	1	---	---	Minutes
Amplification Factor, I_b = 100 ma, E_b = 1750 v	---	40	---	
Peak Cathode Current†	---	---	5.5	Amperes
Direct Interelectrode Capacitances				
Grid-plate	---	9	---	uuf
Grid-cathode	---	11	---	uuf
Plate Cathode‡	---	0.05	---	uuf

Mechanical Data

Mounting Position - Vertical

Air Flow

Through Radiator

Plate Dissipation - Watts	1000	800	600
Air Flow - Cubic Feet per Minute	55	40	30
Static Pressure - Inches Water	1.5	0.9	0.6

To Seals

Incoming Air Temperature	45 Max	C
Glass Temperature, heater seal	150 Max	C
Ceramic-seal Temperature	200 Max	C
Net Weight, approximate	3.5	Pounds

Forced-air cooling of the filament terminals must be provided to limit the temperature of the glass seal to 150 C. Air cooling to be applied before and during the application of any voltages. Air cooling of the anode may be discontinued with removal of all voltages. Air flow on heater-to-cathode seal must be maintained for one minute after removal of heater voltage.

from RTMA release #1099,
June 20, 1952

GENERAL ELECTRIC

MAXIMUM RATINGS AND TYPICAL OPERATING CONDITIONS

Radio-frequency Power Amplifier - Class B
Carrier conditions per tube for use with a maximum modulation factor of 1.0

Maximum Ratings, Absolute Values		
D-c Plate Voltage	3000 Max	Volts
D-c Plate Current	580 Max	Milliamperes
Plate Input	1500 Max	Watts
Plate Dissipation	1000 Max	Watts
Typical Operation - Grounded-filament Circuit		
D-c Plate Voltage	2500	Volts
D-c Grid Voltage	-50	Volts
Peak R-f Plate Voltage	1000	Volts
Peak R-f Grid Voltage	150	Volts
D-c Plate Current	570	Milliamperes
D-c Grid Current	75	Milliamperes
Driving Power, approximate$^{\pi}$	78	Watts
Power Output, approximate	450	Watts
Typical Operation - Grounded-grid Circuit		
D-c Plate Voltage	2500	Volts
D-c Grid Voltage	-50	Volts
Peak R-f Plate Voltage	1000	Volts
Peak R-f Grid Voltage	150	Volts
D-c Plate Current	570	Milliamperes
D-c Grid Current	75	Milliamperes
Driving Power, approximate$^{\pi\Delta}$	240	Watts
Power Output$^{\Delta}$	515	Watts

Radio-frequency Power Amplifier - Class B Television Service
Synchronizing-level conditions per tube unless otherwise specified

Maximum Ratings, Absolute Values		
D-c Plate Voltage	3000 Max	Volts
D-c Plate Current	0.7 Max	Ampere
Plate Input	2000 Max	Watts
Plate Dissipation	1000 Max	Watts
Grid Dissipation	50 Max	Watts
Typical Operation - Grounded-grid Circuit up to 220 Megacycles		
Bandwidth 6 Megacycles		
D-c Plate Voltage	2000	Volts
D-c Grid Voltage	-35	Volts
Peak R-f Plate Voltage		
Synchronizing Level	1000	Volts
Pedestal Level	750	Volts
Peak R-f Driving Voltage		
Synchronizing Level	180	Volts
Pedestal Level	135	Volts
D-c Plate Current		
Synchronizing Level	700	Milliamperes
Pedestal Level	525	Milliamperes
D-c Grid Current		
Synchronizing Level	150	Milliamperes
Pedestal Level	80	Milliamperes
Driving Power at Tube$^{\Delta}$, approximate		
Synchronizing Level	130	Watts
Pedestal Level	70	Watts
Power Output$^{\Delta}$, approximate		
Synchronizing Level	660	Watts
Pedestal Level	375	Watts

Plate-modulated Radio-frequency Power Amplifier - Class C Telephony
Carrier conditions per tube for use with a maximum modulation factor of 1.0

Maximum Ratings, Absolute Values			
D-c Plate Voltage		2400 Max	Volts
D-c Grid Voltage		-400 Max	Volts
D-c Plate Current		580 Max	Milliamperes
D-c Grid Current		150 Max	Milliamperes
Plate Input		1340 Max	Watts
Plate Dissipation		670 Max	Watts
Typical Operation - Grounded-filament Circuit			
D-c Plate Voltage	2400	2000	Volts
D-c Grid Voltage	-200	-200	Volts
Peak R-f Plate Voltage	1800	1500	Volts
Peak R-f Grid Voltage	350	330	Volts
D-c Plate Current	425	350	Milliamperes
D-c Grid Current, approximate	125	110	Milliamperes
Driving Power, approximate	50	35	Watts
Power Output, approximate	675	470	Watts
Typical Operation - Grounded-grid Circuit			
D-c Plate Voltage	2400	2000	Volts
D-c Grid Voltage	-200	-200	Volts
Peak R-f Plate Voltage	1800	1500	Volts
Peak R-f Grid Voltage	350	330	Volts
D-c Plate Current	425	350	Milliamperes
D-c Grid Current, approximate	125	110	Milliamperes
Driving Power◊, approximate	175	137	Watts
Power Output△, approximate	800	575	Watts

Class C Radio-frequency Power Amplifier and Oscillator - Class C Telegraphy
Key-down conditions per tube without amplitude modulation§

Maximum Ratings, Absolute Values			
D-c Plate Voltage		3000 Max	Volts
D-c Grid Voltage		-500 Max	Volts
D-c Plate Current		700 Max	Milliamperes
D-c Grid Current		150 Max	Milliamperes
Plate Input		2000 Max	Watts
Plate Dissipation		1000 Max	Watts
Typical Operation, Grounded-filament Circuit			
D-c Plate Voltage	2500	2800	Volts
D-c Grid Voltage	-200	-250	Volts
Peak R-f Plate Voltage	1700	1800	Volts
Peak R-f Grid Voltage	325	425	Volts
D-c Plate Current	380	600	Milliamperes
D-c Grid Current, approximate	95	110	Milliamperes
Driving Power, approximate	28	50	Watts
Power Output, approximate	375	900	Watts
Typical Operation, Grounded-grid Circuit			
D-c Plate Voltage	2500	2800	Volts
D-c Grid Voltage	-200	-250	Volts
Peak R-f Plate Voltage	1700	1800	Volts
Peak R-f Grid Voltage	325	425	Volts
D-c Plate Current	380	600	Milliamperes
D-c Grid Current, approximate	95	110	Milliamperes
Driving Power△	150	250	Watts
Power Output△	500	1100	Watts

* Heater and cathode life can be conserved by operating the heater at the lowest voltage which will give the desired power output. The proper operating value may be found by reducing the heater voltage with normal modulation applied until a reduction in output is observed. The heater voltage must then be increased by an amount equivalent to the maximum percentage regulation of the heater voltage supply.

† Represents maximum useable cathode current (Plate current plus grid current for any condition of operation).

‡ Measured with a 6-inch outside diameter and 1 1/2-inch inside diameter flat shield connected to the grid terminal and grounded.

π At crest of audio-frequency cycle with modulation factor of 1.

Δ Includes power transferred from driver stage.

◊ The carrier of the driver modulated 100 percent.

§ Modulation essentially negative may be used if the positive peak of the audio-frequency envelope does not exceed 115 percent of the carrier condition.

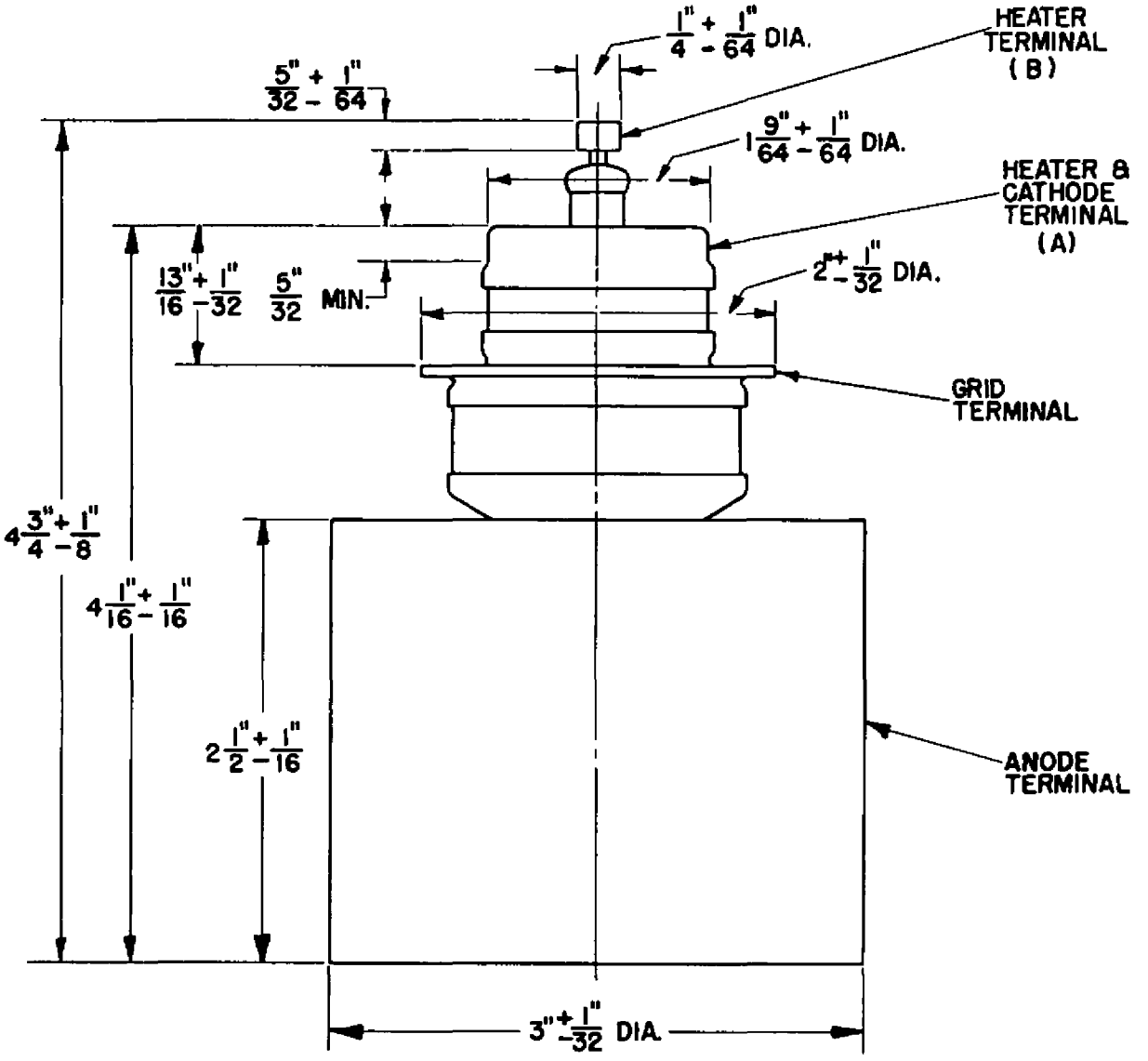

NOTES:

(A) MAXIMUM ECCENTRICITY 0.050" WITH RESPECT TO THE AXIS OF RADIATOR.
(B) MAXIMUM ECCENTRICITY 0.040" WITH RESPECT TO CENTERLINE DETERMINED BY THE CENTERS OF BOTTOM OF RADIATOR AND HEATER TERMINAL (A).

N20722AZ May 20, 1952

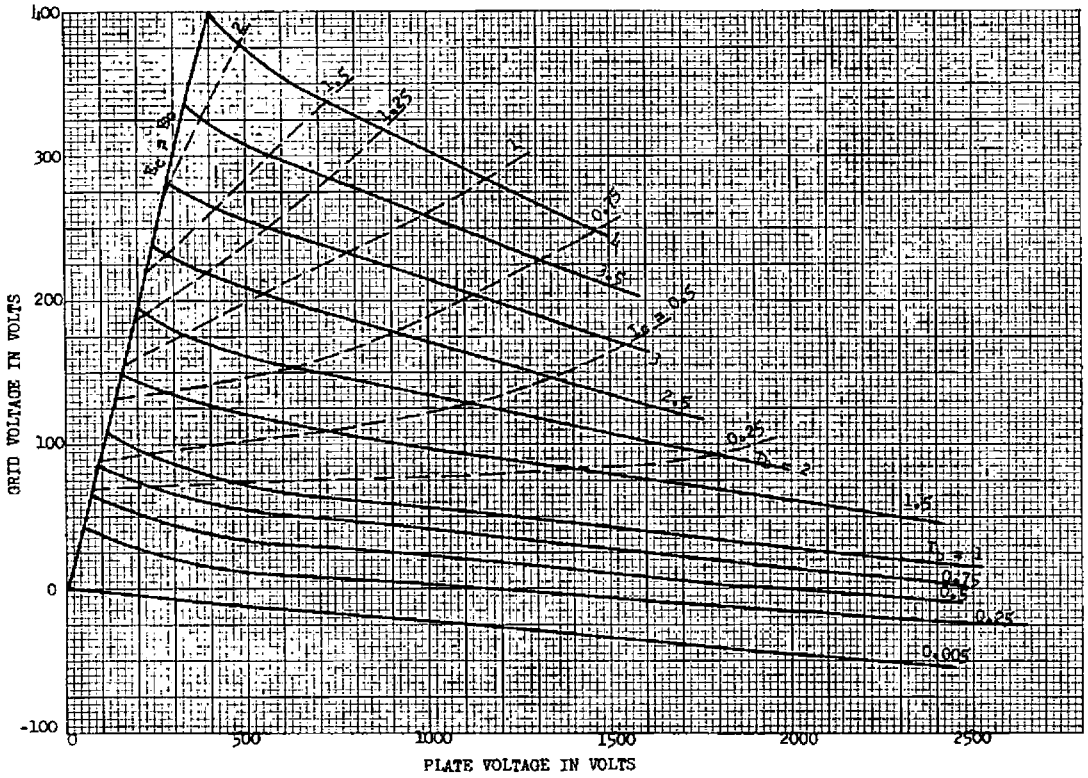

K-69087-72A410 May 26, 1952

GL-6017
Constant-current Characteristics
E_f = 10 Volts A-c

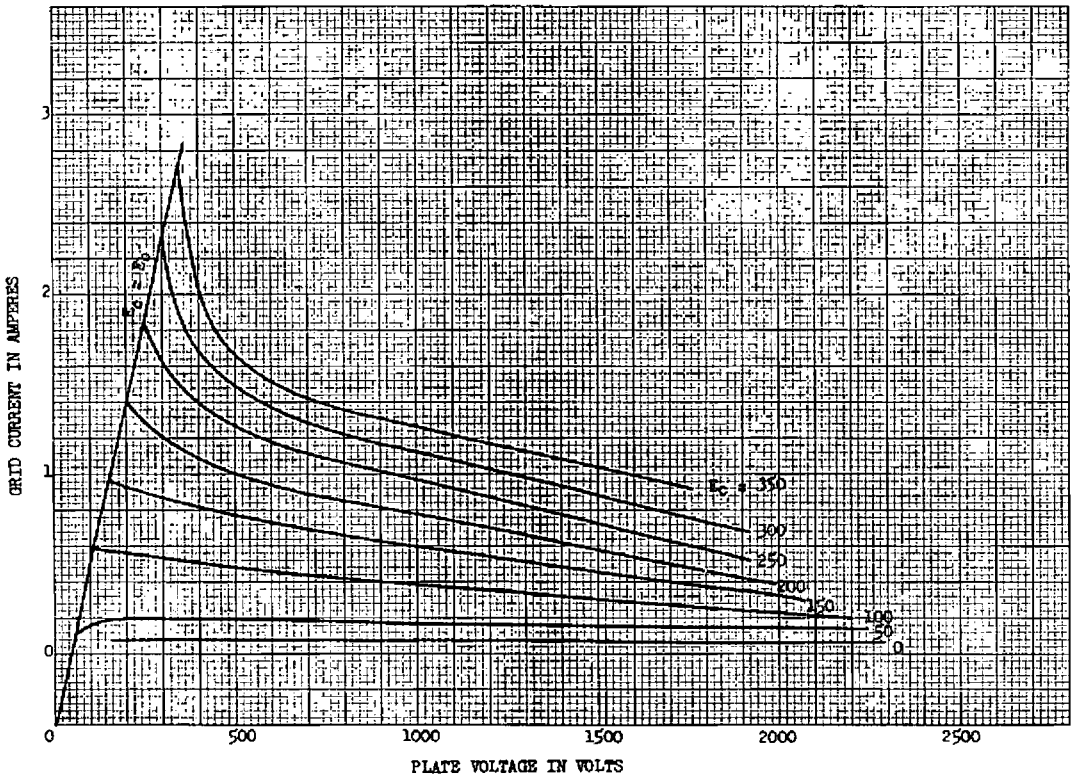

K-69087-72A411 May 26, 1952

GL-6017
Average Grid-plate Transfer Characteristics
E_f = 10 Volts A-c

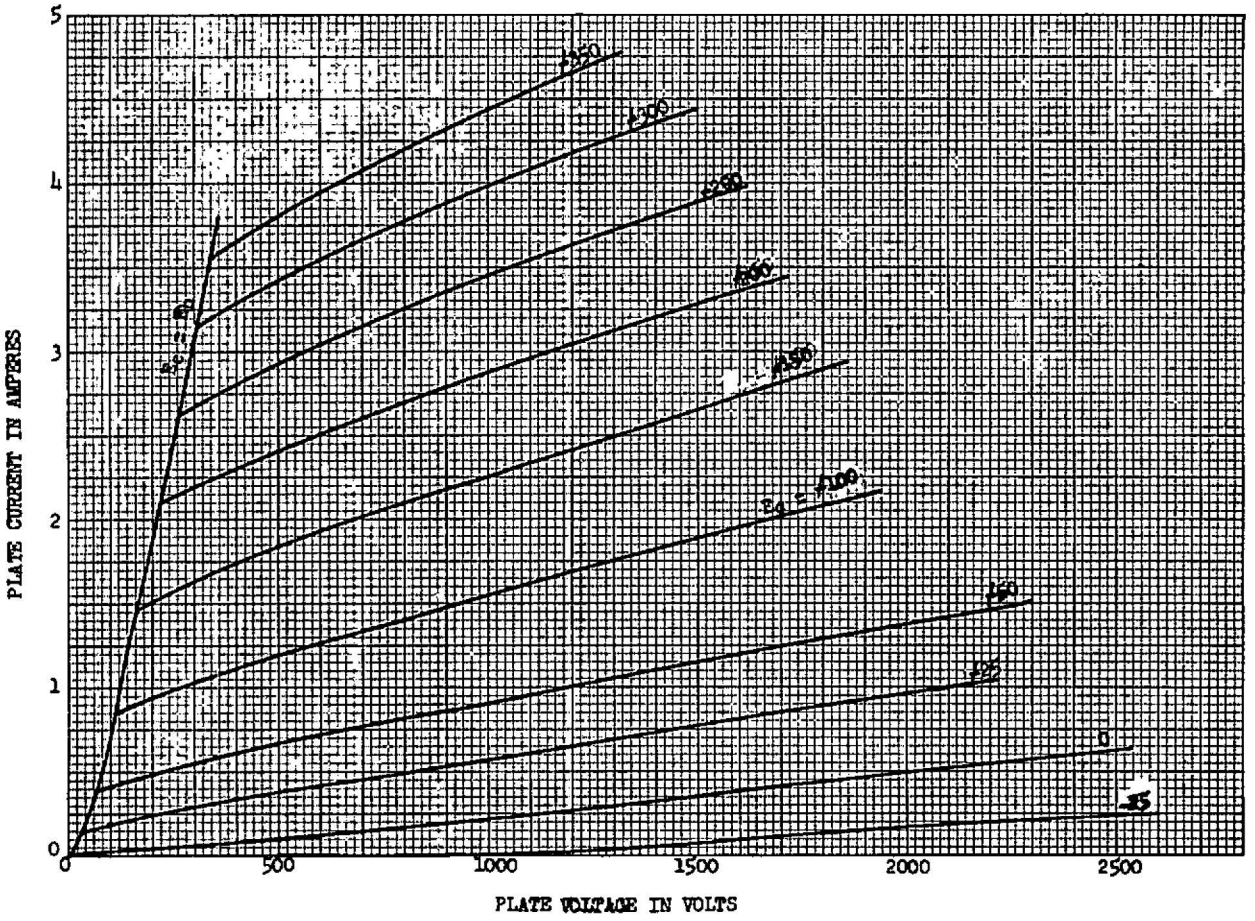

K-69087-72A412 May 26, 1952

GL-6017
Average Plate Characteristics
E_f = 10 Volts A-c

GENERAL ELECTRIC
TUBE DEPARTMENT
SCHENECTADY, NEW YORK