SYLVANIA

engineering data service

SYLVANIA
5ZP15
5ZP*

CHARACTERISTICS

GENERAL DATA

Focusing Method	Electrostatic
Deflection Method	Magnetic
Deflection Angle (approx.)	40 Degrees

Types*

	5ZP15	5ZP16	5ZP24
Fluorescence	Blue-Green	Violet & Near Ultraviolet	Blue-Green
Persistence	Extremely Short	Extremely Short	Extremely Short

Screen	Aluminized
Faceplate	Clear, Non-Browning

**In addition to the types shown, the 5ZP- can be supplied with several other screen phosphors.*

ELECTRICAL DATA

Heater Voltage	6.3	Volts
Heater Current	0.6 ± 10%	Ampere
Direct Interelectrode Capacitances (approx.)		
Cathode to All Other Electrodes	8	μμf
Grid No. 1 to All Other Electrodes	5	μμf
External Conductive Neck Coating to Anode[1]	500	μμf Max.
	100	μμf Min.

MECHANICAL DATA

Minimum Useful Screen Diameter	4¼	Inches
Bulb Contact (Recessed Small Cavity Cap)	J1-21	
Base (Small Shell Duodecal 7-Pin)	B7-51	
Basing	12C	
Bulb Contact Aligns with Vacant Pin Position No. 3	±10	Degrees

RATINGS

MAXIMUM RATINGS (Absolute Maximum Values)

Anode No. 2 Voltage	30,000	Volts	dc
Anode No. 1 Voltage (Focusing Electrode)	7,700	Volts	dc
Grid No. 2 Voltage	385	Volts	dc
Grid No. 1 Voltage			
Negative Bias Value	165	Volts	dc
Positive Bias Value	0	Volts	dc
Positive Peak Value	2	Volts	
Peak Heater-Cathode Voltage			
Heater Negative with Respect to Cathode During Warm-up Period Not to Exceed 15 Seconds	450	Volts	
After Equipment Warm-up Period	165	Volts	
Heater Positive with Respect to Cathode	165	Volts	

QUICK REFERENCE DATA

Flying Spot Scanner Tube
5" Round Glass Type
Flat Faceplate
Clear Non-Browning Faceplate
Magnetic Deflection
Acceleration Type Electrostatic Focus
No Ion Trap
External Conductive Coating on Neck
External Insulating Coating on Bulb
Aluminized Screen

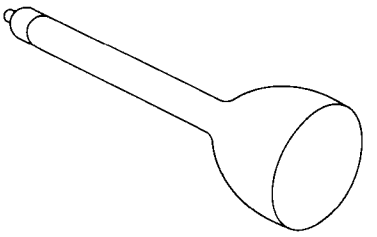

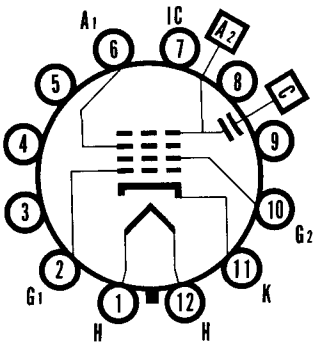

12-C

SYLVANIA ELECTRIC PRODUCTS INC.
TELEVISION PICTURE TUBE DIVISION
SENECA FALLS, NEW YORK

Prepared and Released By The TECHNICAL PUBLICATIONS SECTION EMPORIUM, PENNSYLVANIA

SEPTEMBER, 1958

TYPICAL OPERATING CONDITIONS

Anode Voltage[2]	27,000 Volts	dc
Anode No. 1 Voltage for Focus at Ib = 15 μa	5550 to 7050 Volts	dc
Grid No. 2 Voltage	200 Volts	dc
Grid No. 1 Voltage Required for Cutoff[3]	−42 to −98 Volts	dc
Anode Current	15 μa	dc
Maximum Anode No. 1 Current at Ib = 15 μa	25 μa	dc
Grid No. 2 Current	−15 to +15 μa	dc

CIRCUIT VALUES

Grid No. 1 Circuit Resistance	1.5 Megohms Max.

NOTES:

1. *External conductive neck coating must be grounded.*
2. *Brilliance and definition decrease with decreasing anode voltage. In general, the anode voltage should not be less than 20,000 volts.*
3. *Visual extinction of undeflected focused spot.*

DIAGRAM NOTES:

1. *Reference line is determined by the plane C-C' of the reference line gauge (JETEC No. 110) when the gauge is resting on the glass cone.*
2. *External conductive coating must be grounded.*

WARNING:

X-ray radiation shielding may be necessary to protect against possible danger of personal injury from prolonged exposure at close range if this tube is operated at higher than the manufacturer's Maximum Rated Anode Voltage or 16,000 volts, whichever is less.

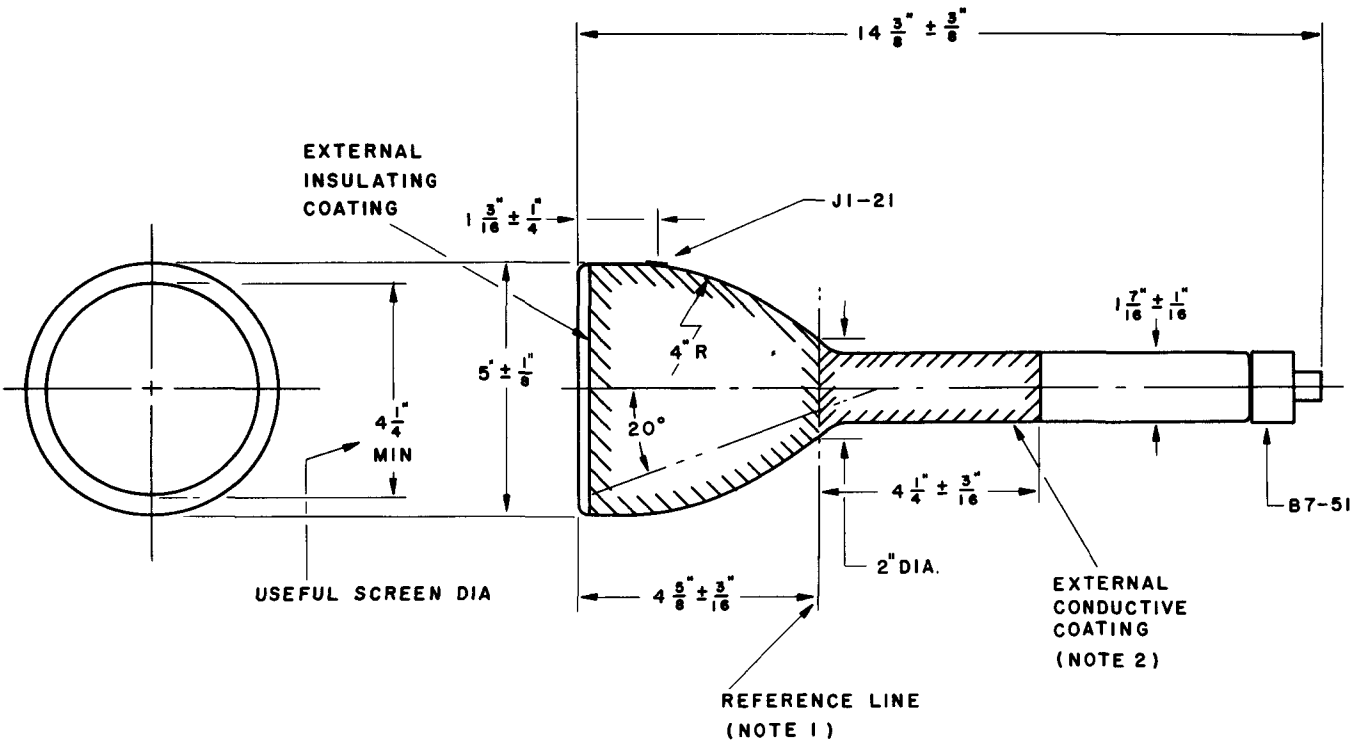

S58009