CHARACTERISTICS

GENERAL DATA

Focusing Method		Electrostatic
Deflection Method		Magnetic
Deflection Angle (approx.)		50°
Types*	**5WP11**	**5WP15**
Fluorescence	Blue	Blue-Green
Persistence	Short	Extremely Short
Screen		Aluminized
Faceplate		Flat, Clear

**In addition to the types shown, the 5WP- can be supplied with several other screen phosphors.*

ELECTRICAL DATA

Heater Voltage	6.3	Volts
Heater Current	0.6 ± 10%	Ampere
Direct Interelectrode Capacitances		
Cathode to All Other Electrodes	5	μμf
Grid No. 1 to All Other Electrodes	7.5	μμf Max.
External Conductive Neck Coating to Anode No. 2[1]	500	μμf Max.
	100	μμf Min.

MECHANICAL DATA

Minimum Useful Screen Diameter	4¼ Inches
Bulb Contact (Recessed Small Cavity Cap)	J1-21
Base (Small Shell Duodecal 7-Pin)	B7-51
Basing	12C
Bulb	C40 Exp. 14 or Equivalent

MAXIMUM RATINGS (Absolute Maximum Values)

Anode No. 2 Voltage	30,000	Volts dc
Anode No. 1 Voltage (Focusing Electrode)	6,600	Volts dc
Grid No. 2 Voltage	385	Volts dc
Grid No. 1 Voltage		
Negative Bias Value	165	Volts dc
Positive Bias Value	0	Volts dc
Positive Peak Value	2	Volts
Peak Heater-Cathode Voltage		
Heater Negative with Respect to Cathode		
During Warm-up Period		
Not to Exceed 15 Seconds	450	Volts
After Equipment Warm-up Period	140	Volts
Heater Positive with Respect to Cathode	140	Volts

QUICK REFERENCE DATA

5WP11—Video Recorder
5WP15—Flying Spot Scanner
5" Round Glass Type
Flat, Clear Faceplate
Magnetic Deflection
Acceleration Type Electrostatic Focus
No Ion Trap
External Conductive Coating on Neck
External Insulating Coating on Bulb
Aluminized Screen

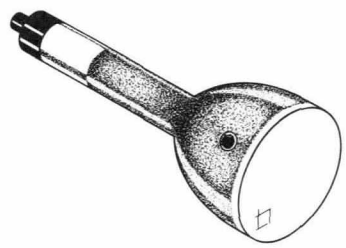

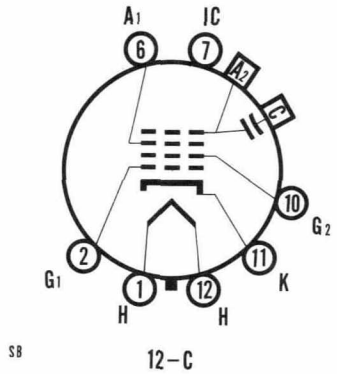

SYLVANIA
ELECTRONIC TUBES
A Division of
Sylvania Electric Products, Inc.

PICTURE TUBE OPERATIONS
SENECA FALLS, NEW YORK

Prepared and Released By The
TECHNICAL PUBLICATIONS SECTION
EMPORIUM, PENNSYLVANIA
SEPTEMBER, 1959

TYPICAL OPERATING CONDITIONS

Anode No. 2 Voltage[2]	27,000	Volts	dc
Anode No. 1 Voltage for Focus	4200 to 5400	Volts	dc
Grid No. 2 Voltage[3]	200	Volts	dc
Grid No. 1 Voltage Required for Cutoff[4]	–42 to –98	Volts	dc
Anode No. 2 Current			
5WP11	20	μa	dc
5WP15	100	μa	dc
Max. Anode No 1. Current			
5WP11	25	μa	dc
5WP15	150	μa	dc
Grid No. 2 Current	–15 to +15	μa	dc

CIRCUIT VALUES

Grid No. 1 Circuit Resistance	1.5	Megohms Max.

NOTES:

1. *External conductive neck coating must be grounded.*
2. *Brilliance and definition decrease with decreasing anode voltage. In general, the anode voltage should not be less than 15,000 volts.*
3. *Subject to variation of ±40% when Grid No. 1 Voltage cutoff is desired at the average cutoff value of –70 volts.*
4. *Visual extinction of undeflected focused spot.*

WARNING:

X-ray radiation shielding may be necessary to protect against possible danger of personal injury from prolonged exposure at close range if this tube is operated at higher than the manufacturer's Maximum Rated Anode Voltage or 16,000 volts, whichever is less.

OUTLINE

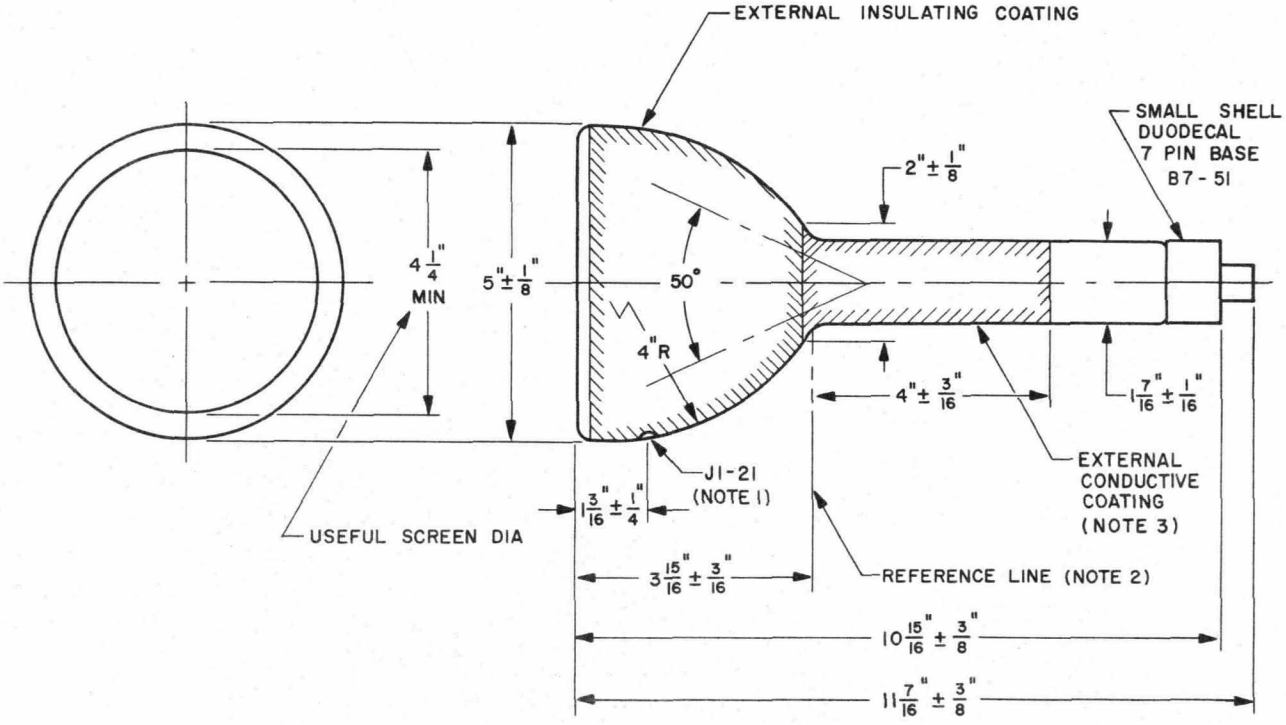

DIAGRAM NOTES:

1. *The plane through the tube axis and vacant pin position No. 3 may vary from the plane through the axis and Anode No. 2 terminal by an angular tolerance (measured about the tube axis) of ±10°.*

   Anode No. 2 terminal is on same side as vacant pin position No. 3.

2. *Reference line is determined by the plane C-C′ of the reference line gauge (JEDEC No. G112) when the gauge is seated on the glass cone.*

3. *External conductive coating must be grounded.*