Westinghouse

5V6-GT
6V6-GT
6V6-GTA
12V6-GT

April 15, 1961

BEAM-POWER PENTODE TYPES 5V6-GT, 6V6-GT, 6V6-GTA AND 12V6-GT

The 5V6-GT, 6V6-GT, 6V6-GTA and 12V6-GT are beam-power types designed for service as power amplifiers where low heater and plate power with moderate output capabilities are desired.

The 5V6-GT and 6V6-GTA have been designed for use in receivers which employ series connected heaters, especially in television receivers where the picture-tube heater is in series with other heaters. When each is employed in this type of circuit with other tubes similarly designed having the same heater current rating, heater voltage surges across individual tubes are minimized inasmuch as heater warm-up characteristic is controlled.

ELECTRICAL:

Cathode . . . . . Coated Unipotential

Heater:	5V6GT	6V6GT 6V6-GTA	12V6GT	
Voltage (ac or dc)	4.7	6.3	12.6	Volts
Current	0.60	0.45	0.30	Ampere
Warm-up Time▲	11	11♦	- -	Seconds

Direct Interelectrode Capacitances: (Unshielded)

Grid 1 to Plate	0.7	μμf
Input	9.0	μμf
Output	7.5	μμf

MECHANICAL:

Bulb	T-9
Base	Intermediate-Shell Octal 7-Pin (JEDEC B7-7)
Outline	9-41
Basing	7AC
Mounting Position	Any

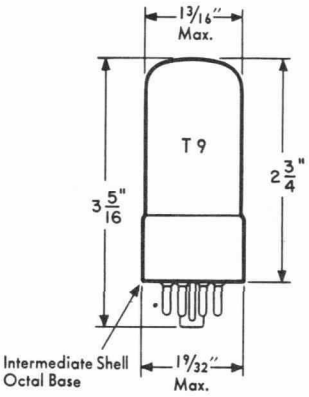

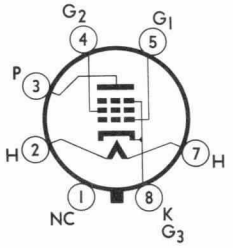

7AC-NC

AF POWER AMPLIFIER-CLASS A

MAXIMUM RATINGS:

Design Center Values

Plate Voltage	350	max.	Volts
Grid 2 Voltage (Screen)	315	max.	Volts
Plate Dissipation	14	max.	Watts
Grid 2 Dissipation	2.2	max.	Watts
Control Grid Circuit Resistance:			
Fixed Bias	0.1	max.	Megohm
Cathode Bias	0.5	max.	Megohm
Heater-Cathode Voltage:			
Heater Negative with Respect to Cathode			
Total DC + Peak	200	max.	Volts
Heater Positive with Respect to Cathode			
DC Component	100	max.	Volts
Total DC + Peak	200	max.	Volts

MAXIMUM CIRCUIT VALUES:

Grid 1 Circuit Resistance:			
For Fixed Bias	0.1	max.	Megohm
For Cathode Bias	0.5	max.	Megohm

CHARACTERISTICS AND TYPICAL OPERATION:

Plate Voltage	180	250	315	Volts
Grid 2 Voltage	180	250	225	Volts
Control Grid Voltage	−8.5	−12.5	−13.0	Volts
Peak AF Control Grid Voltage	8.5	12.5	13.0	Volts
Zero-Signal Plate Current	29	45	34	Ma.
Max. Signal Plate Current	30	47	35	Ma.
Zero-Signal Grid 2 Current	3	4.5	2.2	Ma.
Max.-Signal Grid 2 Current	4	7	6	Ma.
Plate Resistance (Approx.)	50000	50000	80000	Ohms
Transconductance	3700	4100	3750	μmhos
Load Resistance	5500	5000	8500	Ohms
Power Output	2.0	4.5	5.5	Watts
Total Harmonic Distortion (Approx.)	8	8	12	Per Cent

MAXIMUM CIRCUIT VALUES:

Grid 1 Circuit Resistance:		
For Fixed Bias	0.1	Megohm
For Cathode Bias	0.5	Megohm

TYPICAL PUSH-PULL OPERATION:
(Values for two tubes unless otherwise specified)

Plate Voltage	250	285	Volts
Grid 2 Voltage	250	285	Volts
Grid 1 Voltage	–15	–19	Volts
Peak AF Grid-to-Grid Voltage	30	38	Volts
Transconductance (Per Tube)	3750	3600	μmhos
Zero Signal Plate Current	70	70	Ma.
Maximum Signal Plate Current	79	92	Ma.
Zero Signal Screen Current	5.0	4	Ma.
Maximum Signal Screen Current	13	13.5	Ma.
Effective Load Resistance (Plate-to-Plate)	10000	8000	Ohms
Total Harmonic Distortion	5	3.5	Per Cent
Power Output	10	14	Watts
Plate Resistance (Per Tube)	60000	70000	Ohms

AF POWER AMPLIFIER - CLASS AB_1

MAXIMUM RATINGS:
Design-Center Values

Plate Voltage	250	max.	Volts
Grid 2 Voltage	250	max.	Volts
Plate Dissipation	12	max.	Watts
Grid 2 Dissipation	2	max	Watts
Bulb Temperature*	250	max.	°C
Heater-Cathode Voltage:			
Heater Negative with Respect to Cathode			
Total DC + Peak	200	max.	Volts
Heater Positive with Respect to Cathode			
DC Component	100	max.	Volts
Total DC + Peak	200	max.	Volts

VERTICAL DEFLECTION AMPLIFIER●
Triode Connection #

MAXIMUM RATINGS:
Design Center Values

Plate Voltage	350	max.	Volts
Peak Positive Pulse Plate Voltage	1200	max.	Volts
Plate Dissipation■	10	max.	Watts
Peak Negative Pulse Grid Voltage	275	max.	Volts
Average Cathode Current	40	max.	Ma.
Peak Cathode Current	115	max.	Ma.
Heater-Cathode Voltage:			
Heater Negative with Respect to Cathode			
Total DC + Peak	200	max.	Volts
Heater Positive with Respect to Cathode			
DC Component	100	max.	Volts
Total DC + Peak	200	max.	Volts

CHARACTERISTICS AND TYPICAL OPERATION:

Plate Voltage	250	Volts
Grid Voltage	–12.5	Volts
Plate Current	49.5	Ma.
Transconductance	5000	μmhos
Amplification Factor	9.8	
Plate Resistance	1960	Ohms
Grid Voltage (Approx.) for I_b = 0.5 ma.	–36	Volts

● For operation in a 525 line, 30-frame system as described in "Standards of Good Engineering Practice for Television Broadcast Stations; Federal Communications Commission". The duty cycle of the voltage pulse not to exceed 15% of a scanning cycle.

\# Plate and grid 2 tied together.

* High ambient temperature and shielding may necessitate a reduction in operating dissipation. When tube shields are used, it is advisable to paint both inside and outside surfaces of the tube shield a dull black and to provide ventilation slots to reduce operating temperature.

■ Stages operating with grid leak bias must use an adequate cathode bias resistor or similar means in order to protect the tube in the absence of excitation.

♦ 6V6-GTA only.

▲ Heater warm-up time is defined as the time required for the voltage across the heater to reach 80% of its rated value after applying 4 times rated heater voltage to a circuit consisting of the tube heater in series with a resistance equal to 3 times rated heater voltage divided by rated heater current.

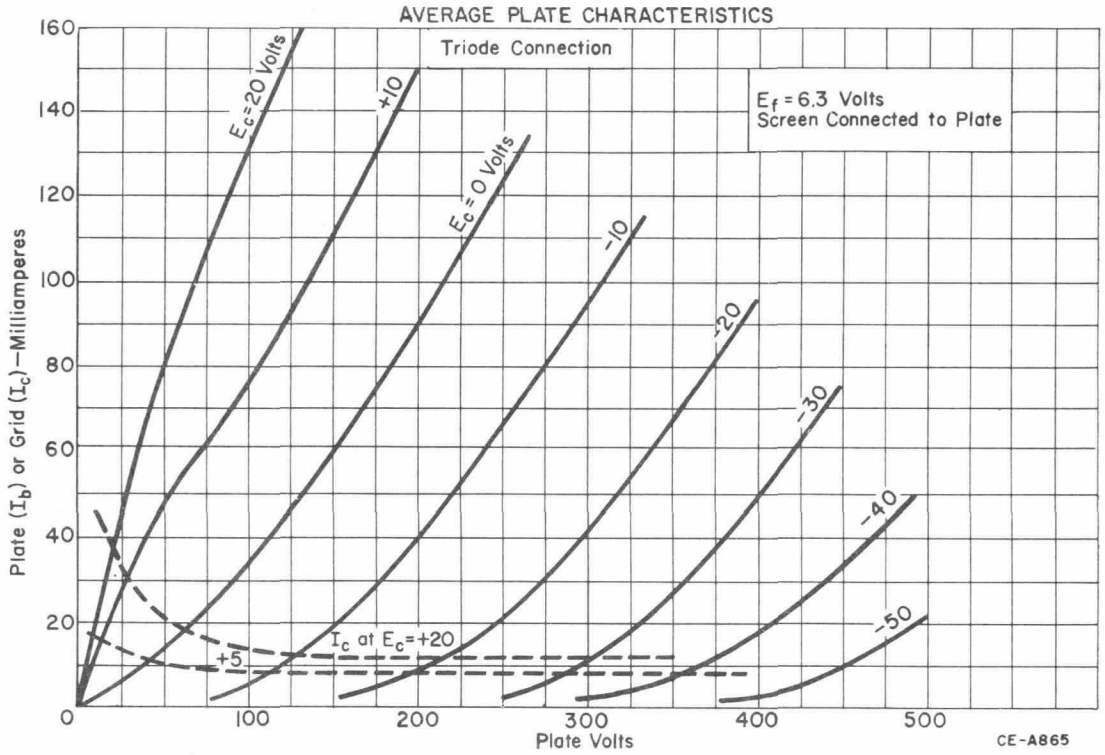
AVERAGE PLATE CHARACTERISTICS
Triode Connection
E_f = 6.3 Volts
Screen Connected to Plate
E_c=20 Volts
+10
E_c = 0 Volts
-10
-20
-30
-40
-50
+5
I_c at E_c=+20
Plate (I_b) or Grid (I_c)—Milliamperes
Plate Volts
CE-A865

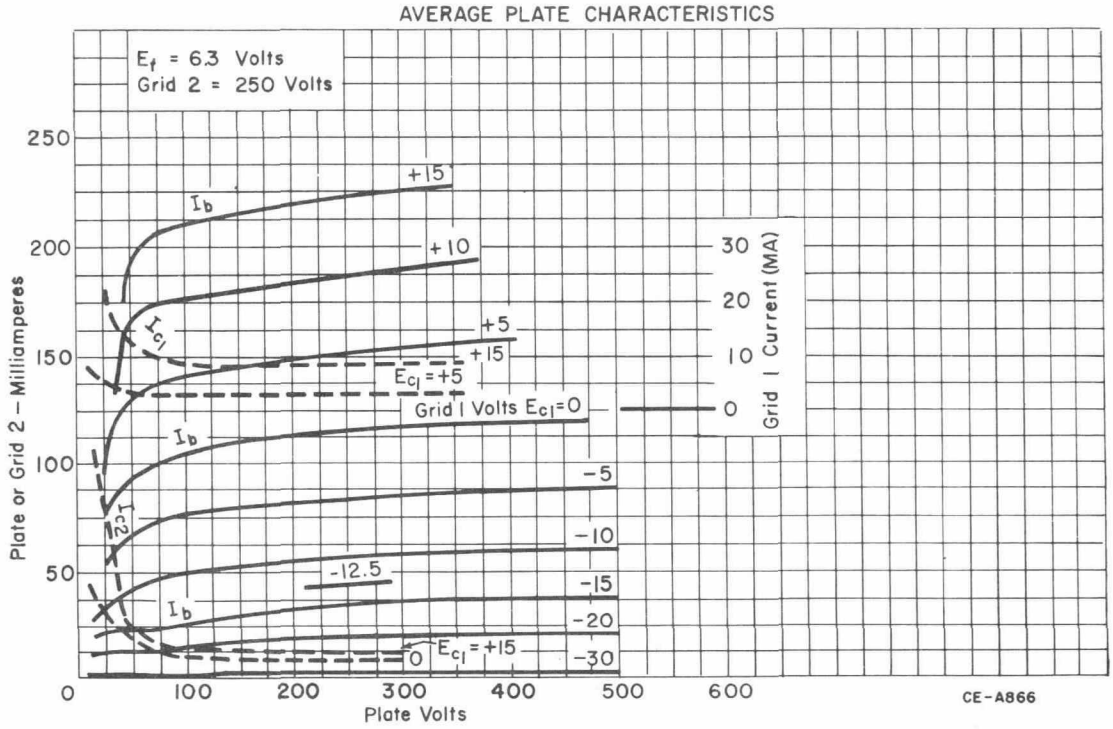
AVERAGE PLATE CHARACTERISTICS
E_f = 6.3 Volts
Grid 2 = 250 Volts
+15
I_b
+10
I_{c1}
+5
+15
E_{c1} = +5
Grid 1 Volts E_{c1}=0
I_b
-5
I_{c2}
-10
-12.5
-15
I_b
-20
0
E_{c1} = +15
-30
Grid 1 Current (MA)
Plate or Grid 2 — Milliamperes
Plate Volts
CE-A866

OPERATION CHARACTERISTICS

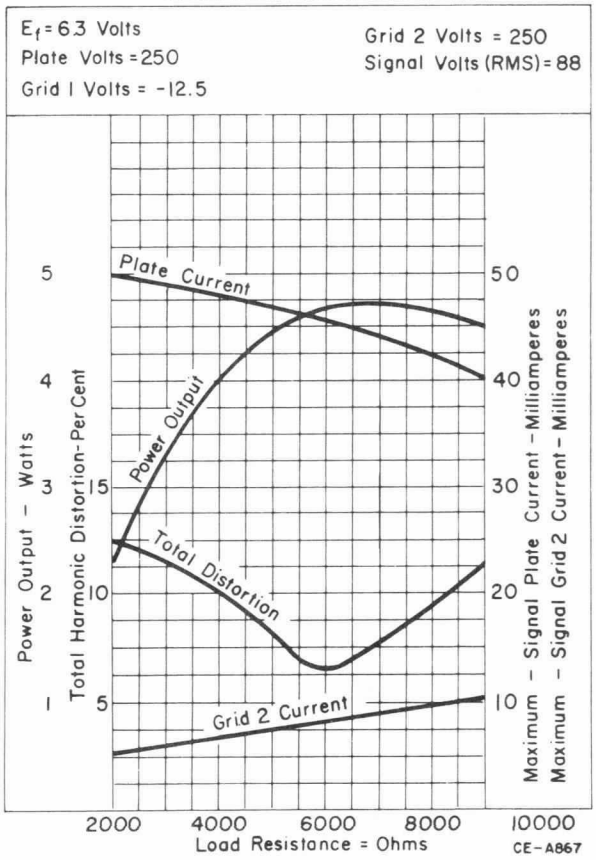

The information contained herein is supplied without assuming responsibility for infringement of patents or other rights of third parties which may result from its use. No license is granted by implication or otherwise under any patent or patent rights of Westinghouse Electric Corporation.