SYLVANIA

engineering data service

SYLVANIA

5UP1
5UP7
5UP11

CHARACTERISTICS

GENERAL DATA

Focusing Method	Electrostatic
Deflection Method	Electrostatic
Phosphor	P1
Fluorescence	Green
Persistence	Medium
Faceplate	Clear

ELECTRICAL DATA

Heater Voltage	6.3 Volts
Heater Current	0.6 ±10% Ampere
Direct Interelectrode Capacitances (approx.)	
Grid to All Other Electrodes	8.0 μμf
Between Deflecting Plates 1-2	2.5 μμf
Between Deflecting Plates 3-4	2.5 μμf
Deflecting Plate 1[1] to All Other Electrodes	11.0 μμf
Deflecting Plate 2[1] to All Other Electrodes	8.0 μμf
Deflecting Plate 3[1] to All Other Electrodes	7.0 μμf
Deflecting Plate 4[1] to All Other Electrodes	8.0 μμf

MECHANICAL DATA

Minimum Useful Screen Diameter	4½ Inches
Base (Small-Shell Duodecal 10-Pin)	B10-75
or (Small Shell Duodecal 12-Pin)	B12-43
Basing	12E

MAXIMUM RATINGS (Absolute Maximum Values)

Anode No. 2 Voltage	2750 Volts dc
Anode No. 1 Voltage	1100 Volts dc
Grid Voltage	
Negative Bias Value	220 Volts dc
Positive Bias Value	0 Volts dc
Positive Peak Value	2 Volts
Peak Heater-Cathode Voltage	
Heater Negative with Respect to Cathode	140 Volts
Heater Positive with Respect to Cathode	140 Volts
Peak Voltage Between Anode No. 2 and Any Deflection Plate	550 Volts

TYPICAL OPERATING CONDITIONS

Anode No. 2 Voltage[2]	2000 Volts dc
Anode No. 1 Voltage for Focus	340 to 640 Volts dc
Maximum Grid Voltage Required for Cutoff[3]	-90 Volts dc
Deflection Factor[4, 5]	
Deflecting Plates 1-2[6]	56 to 77 Volts dc/Inch
Deflecting Plates 3-4[7]	46 to 62 Volts dc/Inch

CIRCUIT VALUES

Grid Circuit Resistance	1.5 Megohms Max.
Deflection Circuit Resistance	5.0 Megohms Max.

QUICK REFERENCE DATA

Special Purpose Tube
5" Direct Viewed
Round Glass Type
Electrostatic Deflection
Electrostatic Focus

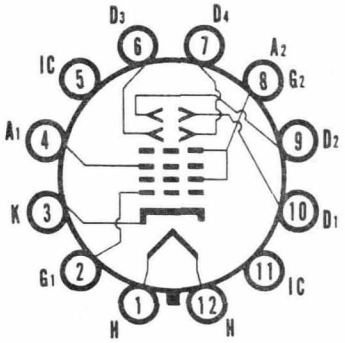

12-E

SYLVANIA ELECTRIC PRODUCTS INC.

TELEVISION PICTURE TUBE DIVISION

SENECA FALLS, NEW YORK

Prepared and Released By The
TECHNICAL PUBLICATIONS SECTION
EMPORIUM, PENNSYLVANIA

JULY, 1957

NOTES:

1. *Positive voltage on Pin No. 10 will move spot approximately in direction of Pin No. 4. Positive voltage on Pin No. 6 will move spot approximately in direction of Pin No. 1.*
2. *Brilliance and definition decrease with decreasing Anode No. 2 Voltage. In general, Anode No. 2 Voltage should not be less than 1000 volts for the Type 5UP1 and not less than 1500 volts for the Types 5UP7 and 5UP11.*
3. *Visual extinction of undeflected focused spot.*
4. *Angle between trace produced by plates D1-D2 and the plane through the tube axis and Pin No. 4 does not exceed 10°.*
5. *Angle between D1-D2 trace and D3-D4 trace is 90° ± 30.*
6. *Deflecting Plates 1-2 are nearer the screen.*
7. *Deflecting Plates 3-4 are nearer the base.*

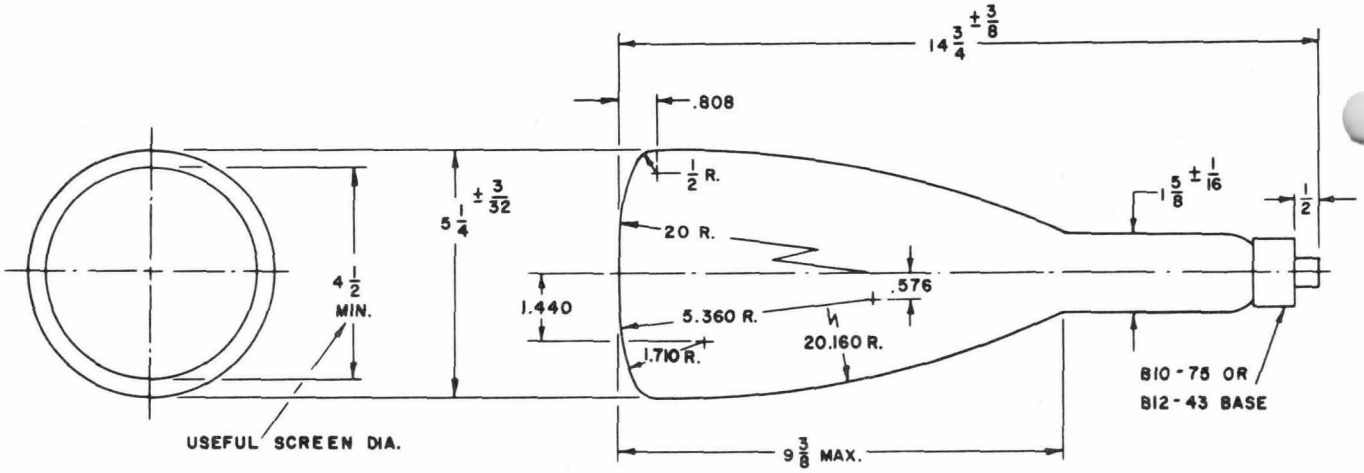

5UP7

The Sylvania Type 5UP7 is identical to the Type 5UP1 except it has a blue-white fluorescence, yellow phosphorescence, long persistence phosphor.

5UP11

The Sylvania Type 5UP11 is identical to the Type 5UP1 except it has blue phosphor and a short persistence.