Amperex® ELECTRONIC CORPORATION
HICKSVILLE, LONG ISLAND, N. Y. 11802

TYPE 5EJP SERIES

The Amperex 5EJP series are electrostatically focused and deflected cathode ray tubes for use in precision instruments. They have a 5 inch flat face with neck connections to the deflection plates and incorporate a helical, distributed P.D.A. system.

The 5EJP series employ the modern mesh grid technique which yields a vertical deflection factor in the order of 2.9 V/cm.

GENERAL CHARACTERISTICS

MECHANICAL

Dimensions — see outline drawing
Screen

Type	Phosphor	Fluorescence	Persistence
5EJP2	P2	Yellowish-green	Medium Short
5EJP7	P7	Purplish-blue	Long
5EJP11	P11	Blue	Short
5EJP31	P31	Green	Medium Short

ELECTRICAL

Cathode	indirectly heated
Filament Voltage	6.3 volts
Filament Current	300 ma
Focusing and Deflection	electrostatic
Line Width[1]	0.024 inch
Interelectrode Capacitances	
Grid No. 1 to All Electrodes	6.0 pf
Cathode to All Electrodes	3.6 pf
Deflection Plate X1 to All Electrodes (except X2)	4.5 pf
Deflection Plate X2 to All Electrodes (except X1)	4.5 pf
Deflection Plate X1 to X2	2.7 pf
Deflection Plate Y1 to All Electrodes (except Y2)	3.8 pf
Deflection Plate Y2 to All Electrodes (except Y1)	3.8 pf
Deflection Plate Y1 to Y2	1.8 pf

[1] Line width measured by the shrinking raster method at 25 μa beam current.

Amperex

MAXIMUM RATINGS, ABSOLUTE VALUES

Post Accelerator Voltage (G-9)	17.3 kv max.
	9.0 kv min.
Helix Voltage, Lower End (G-8)	1.8 kv max.
	1.0 kv min.
Post Deflection Shield Voltage (G-7)	1.8 kv max.
	900 volts min.
Pattern Adjustment Electrode Voltage (G-6)	1.8 kv max.
	1.0 kv min.
Interplate Shield Voltage (G-5)	1.8 kv max.
	1.0 kv min.
Astigmatism Adjustment Electrode Voltage (G-4)	1.8 kv max.
	1.0 kv min.
Focusing Electrode Voltage (G-3)	1.5 kv max.
Accelerator Voltage (G-2)	1.7 kv max.
	800 volts min.
Grid No. 1 Voltage	-200 volts max.
	-1 volt min.
Cathode to Heater Voltage	
Cathode Positive	200 volts max.
Cathode Negative	125 volts max.
Horizontal Deflection Plate to Grid No. 4 Voltage	500 volts max.
Vertical Deflection Plate to Grid No. 4 Voltage	500 volts max.
Grid No. 7 to Grid No. 6 Voltage	
Grid No. 7 Positive	0 volt max.
Grid No. 7 Negative	100 volts max.
Grid No. 5 to Grid No. 4 Voltage	200 volts max.
Grid No. 6 to Grid No. 4 Voltage	200 volts max.
Grid No. 8 to Grid No. 4 Voltage	200 volts max.
Grid No. 1 Circuit Resistance	1.0 megohm

TYPICAL OPERATING CONDITIONS

Post Accelerator Voltage (G-9)	15.0 kv
Helix Voltage, Lower End (G-8)	1.5 kv
Post Deflection Shield Voltage (G-7)	
(with respect to Grid No. 6)	-12 to -18 volts
Pattern Adjustment Electrode Voltage (G-6)	
(with respect to Deflection Plate Potential)	±70 volts
Mean X Deflection Plate Potential	1.5 kv
Interplate Shield Voltage (G-5)	1.5 kv
Mean Y Deflection Plate Potential	1.5 kv
Astigmatism Adjustment Electrode Voltage (G-4)	1500±70 volts
Focusing Electrode Voltage (G-3)	375-625 volts
Accelerator Voltage (G-2)	1.5 kv
Negative Grid No. 1 Voltage	
(for visual extinction of a focused spot)	45-85 volts
Deflection Factor	
Horizontal (X)	9.4-12.5 V/cm
Vertical (Y)	2.3-3.5 V/cm
Useful Scan	
Horizontal (X)	10 cm
Vertical (Y)	6 cm
Post Deflection Accelerator Helix Resistance	200 megohms min.
Spot Position	See Note 2
Linearity of Deflection	See Note 3
Raster Distortion	See Note 4.

NOTES

If use is made of the full deflection capabilities of the tube, the deflection plates will intercept part of the electron beam near the edge of the tube. Therefore a low impedance deflection plate drive is desirable.

2. With the tube shielded, the undeflected focused spot will fall within a rectangle 12x20 mm, centered at the geometric center of the tube face. The greater dimension being in the X direction.
3. The sensitivity at a deflection of less than 75% of the useful scan will not differ from the sensitivity at a deflection of 25% of the useful scan by more than 2%.
4. A focused raster, whose size is adjusted so that the widest points just touch a rectangle 100x50 mm, will have no point within a concentric rectangle 98x58.2 mm.

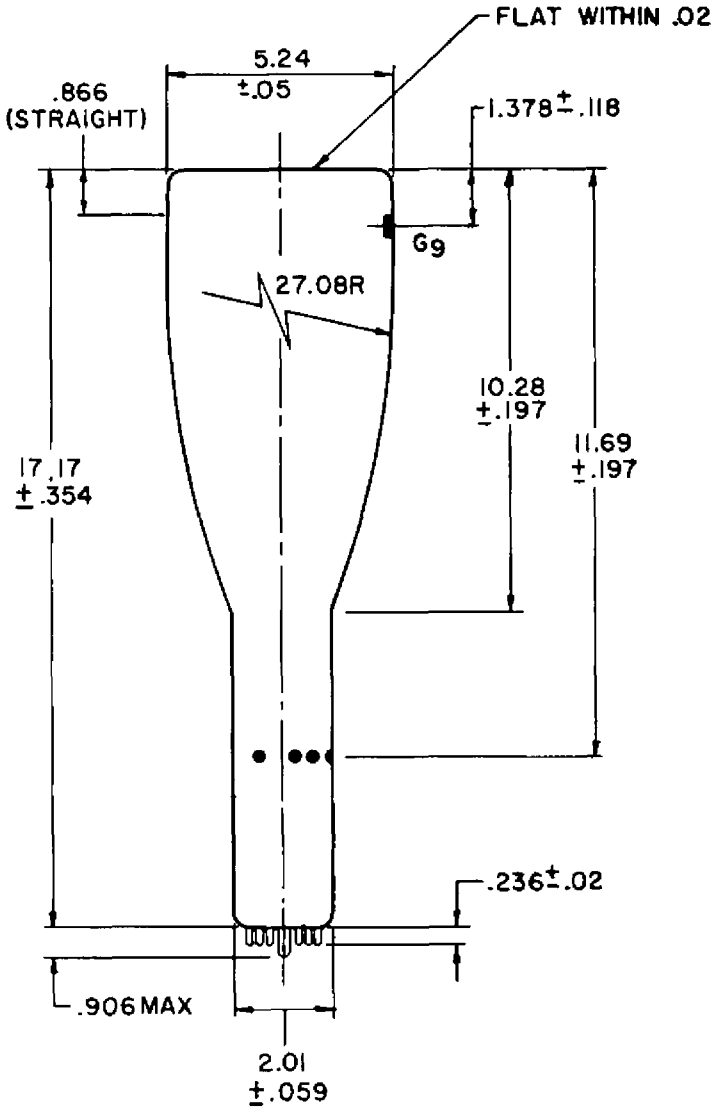
FLAT WITHIN .02
5.24
±.05
.866
(STRAIGHT)
1.378±.118
G9
27.08R
10.28
±.197
11.69
±.197
17.17
±.354
.236±.02
.906 MAX
2.01
±.059

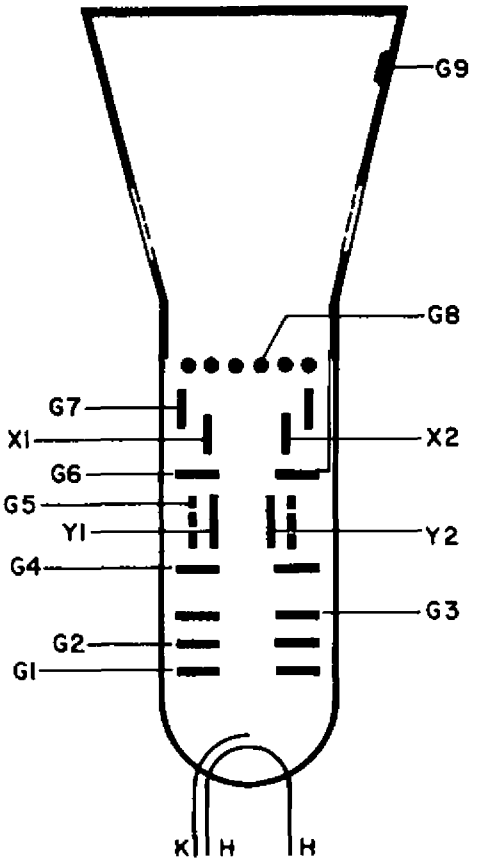
G9
G8
G7
X1
X2
G6
G5
Y1
Y2
G4
G3
G2
G1
K
H
H

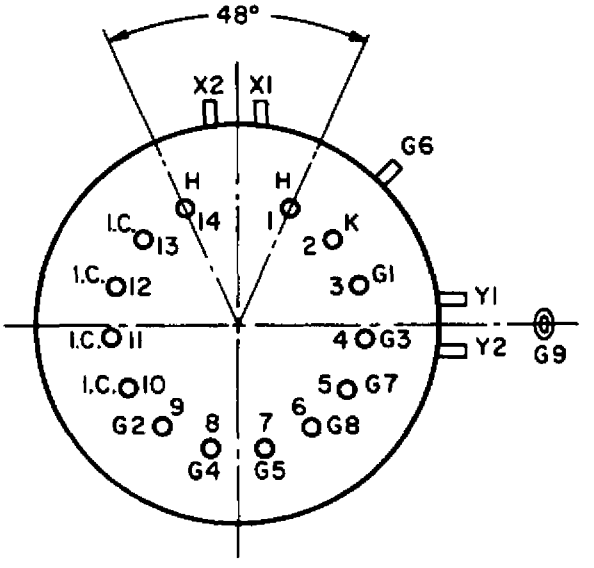
48°
X2
X1
G6
H
H
I.C.
14
1
2
K
I.C.
13
I.C.
12
3
G1
Y1
I.C.
11
4
G3
Y2
G9
I.C.
10
5
G7
G2
9
8
7
6
G8
G4
G5

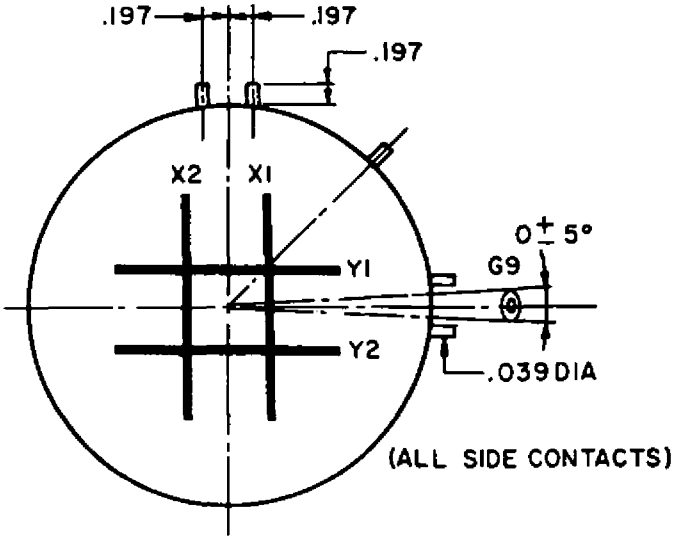
.197
.197
.197
X2
X1
0±5°
Y1
G9
Y2
.039 DIA
(ALL SIDE CONTACTS)