SYLVANIA

engineering data service

SYLVANIA
5DEP1
5DEP-*

CHARACTERISTICS

GENERAL DATA

Focusing Method				Electrostatic
Deflection Method				Electrostatic
Phosphor*	P1	P2	P7	P11
Fluorescence	Green	Green	Blue-White	Blue
Phosphorescence	—	Green	Yellow	—
Persistence	Medium	Long	Long	Short
Faceplate				Clear

*In addition, the 5DEP — can be supplied with several other screen phospors.

ELECTRICAL DATA

Heater Voltage	6.3 Volts
Heater Current	0.6 ± 10% Ampere
Direct Interelectrode Capacitances (Approx.)	
Grid to All Other Electrodes	6.0 μμf
Between Deflecting Plates 1-2	3.5 μμf
Between Deflecting Plates 3-4	3.0 μμf
Deflecting Plate 1[1] to All Other Electrodes	10.0 μμf
Deflecting Plate 2[1] to All Other Electrodes	6.5 μμf
Deflecting Plate 3[1] to All Other Electrodes	7.5 μμf
Deflecting Plate 4[1] to All Other Electrodes	5.0 μμf

MECHANICAL DATA

Minimum Useful Screen Diameter	4½ Inches
Bulb	J42J
Base (Small Shell Duodecal 12-Pin)	B12-43
Basing	12E
Weight (Approx.)	1½ Pounds

MAXIMUM RATINGS (Absolute Maximum Values)

Anode No. 2 Voltage	2750 Volts	dc
Anode No. 1 Voltage	1100 Volts	dc
Grid Voltage		
Negative Bias Value	220 Volts	dc
Positive Bias Value	0 Volts	dc
Positive Peak Value	2 Volts	
Peak Heater-Cathode Voltage		
Heater Negative with Respect to Cathode	140 Volts	
Heater Positive with Respect to Cathode	140 Volts	
Peak Voltage Between Anode No. 2 and Any Deflection Plate	550 Volts	

TYPICAL OPERATING CONDITIONS

Anode No. 2 Voltage [2]	2000 Volts	dc
Anode No. 1 Voltage for Focus	340 to 640 Volts	dc
Maximum Grid Voltage Required for Cutoff[3]	–90 Volts	dc
Deflection Factor[4,5]		
Deflecting Plates 1-2[6]	48 to 64 Volts	dc/Inch
Deflecting Plates 3-4[7]	27 to 37 Volts	dc/Inch
Spot Position (Undeflected)[8]	10 mm	Max.

CIRCUIT VALUES

Grid Circuit Resistance	1.5 Megohms Max.
Deflection Circuit Resistance	5.0 Megohms Max.

QUICK REFERENCE DATA

Oscilloscope Tube
5" Direct Viewed
Round Glass Type
Electrostatic Deflection
Electrostatic Focus
High Deflection Sensitivity

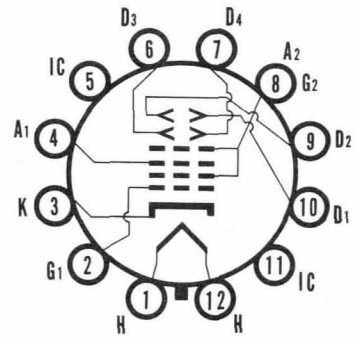

12-E

SYLVANIA
ELECTRONIC TUBES

A Division of
Sylvania Electric Products Inc.

PICTURE TUBE OPERATIONS
SENECA FALLS, NEW YORK

Prepared and Released By The
TECHNICAL PUBLICATIONS SECTION
EMPORIUM, PENNSYLVANIA

OCTOBER, 1961

File Under
SPECIAL AND GENERAL PURPOSE
CATHODE RAY TUBES

NOTES:

1. *Positive voltage on D1 (Pin No. 10) will move spot approximately in direction of Pin No. 4. Positive voltage on D3 (Pin No. 6) will move spot approximately in direction of Pin No. 1.*
2. *Brilliance and definition decrease with decreasing Anode No. 2 Voltages. In general, Anode No. 2 Voltage should not be less than 1000 volts for the Type 5DEP1 and not less than 1500 volts for the Types 5DEP2, 5DEP7, and 5DEP11.*
3. *Visual extinction of undeflected focused spot.*
4. *Angle between trace produced by Plates D1-D2 and the plane through the tube axis and Pin No. 4 does not exceed 10°.*
5. *Angle between D1-D2 trace and D3-D4 trace is 90° ± 1°.*
6. *Deflecting Plates 1-2 are nearer the screen.*
7. *Deflecting Plates 3-4 are nearer the base.*
8. *With the tube shielded and with all deflection plates connected to A2, the spot shall fall within a square, 10 mm on a side, centered with respect to the face and with the sides parallel to the deflection axes.*

OUTLINE

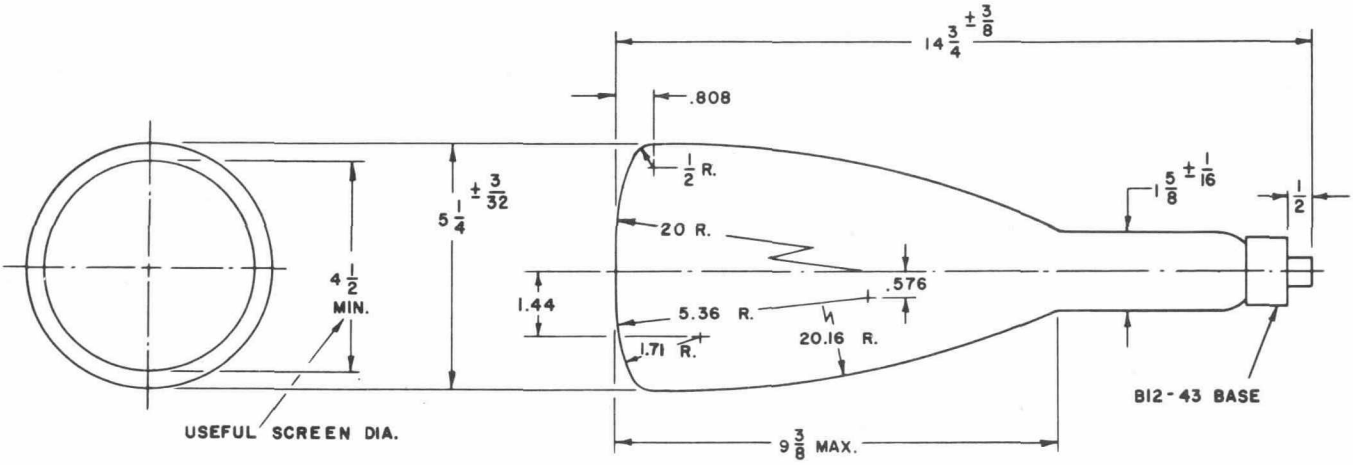

DIAGRAM NOTE:

1. *Dimensions are in inches.*