SYLVANIA

engineering data service

SYLVANIA

5CP1A

5CP7A, 5CP11A
5CP12

CHARACTERISTICS

GENERAL DATA

Focusing Method	Electrostatic
Deflecting Method	Electrostatic
Phosphor	P1
Fluorescence	Green
Persistence	Medium
Faceplate	Clear

ELECTRICAL DATA

Heater Voltage	6.3 Volts
Heater Current (approx.)	0.6 Ampere
Direct Interelectrode Capacitances (approx.)	
Cathode to All Other Electrodes	9 μμf
Grid No. 1 to All Other Electrodes	8 μμf
Between Deflecting Plates 1-2[1]	2 μμf
Between Deflecting Plates 3-4[1]	2 μμf
Deflecting Plate 1[1] to All Other Electrodes	9 μμf
Deflecting Plate 2[1] to All Other Electrodes	9 μμf
Deflecting Plate 3[1] to All Other Electrodes	7 μμf
Deflecting Plate 4[1] to All Other Electrodes	8 μμf

MECHANICAL DATA

Minimum Useful Screen Dimension (Diameter)	4½ Inches
Bulb Contact (Recessed Small Ball Cap)	J1-22
Base (Medium Shell Diheptal 12-Pin)	B12-37
Basing	14J

RATINGS

MAXIMUM RATINGS (Design Center Values)

Anode No. 3 Voltage	4,000 Volts dc
Anode No. 2 Voltage	2,000 Volts dc
Anode No. 1 Voltage	1,000 Volts dc
Grid No. 1 Voltage	
Negative Bias Value	200 Volts dc
Positive Bias Value	0 Volts dc
Positive Peak Value	2 Volts
Peak Heater Cathode Voltage	
Heater Negative with Respect to Cathode	125 Volts
Heater Positive with Respect to Cathode	125 Volts
Peak Voltage Between Anode No. 2 And Any Deflecting Plate	500 Volts

RECOMMENDED OPERATING CONDITIONS

Anode No. 3 Voltage	4,000 Volts dc
Anode No. 2 Voltage	2,000 Volts dc
Anode No. 1 Voltage	375 to 690 Volts dc
Grid No. 1 Voltage Required for Cutoff[2]	−30 to −90 Volts dc
Deflection Factor	
Deflecting Plates 1-2[3]	92 Volts dc/Inch
Deflecting Plates 3-4[4]	78 Volts dc/Inch

CIRCUIT VALUES

Grid No. 1 Circuit Resistance	1.5 Megohms Max.
Deflection Circuit Resistance	5.0 Megohms Max.

QUICK REFERENCE DATA

Special Purpose Tube
5″ Direct Viewed
Round Glass Type
Electrostatic Deflection
Electrostatic Focus
Post Deflection Accelerator

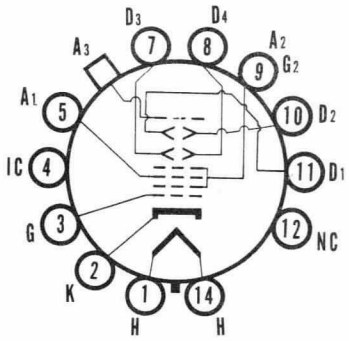

14-J

SYLVANIA ELECTRIC PRODUCTS INC.

TELEVISION PICTURE TUBE DIVISION
SENECA FALLS, NEW YORK

Prepared and Released By The
TECHNICAL PUBLICATIONS SECTION
EMPORIUM, PENNSYLVANIA

JULY, 1954

SYLVANIA

5CP1A

5CP7A, 5CP11A
5CP12

NOTES:

1. *Deflecting Plate 1 is Pin No. 11*
   Deflecting Plate 2 is Pin No. 10
   Deflecting Plate 3 is Pin No. 7
   Deflecting Plate 4 is Pin No. 8
2. *Visual extinction of undeflected focused spot.*
3. *Deflecting Plates 1-2 are nearer the screen.*
4. *Deflecting Plates 3-4 are nearer the base.*
5. *The plane through the tube axis and each of the following items may vary from the trace produced by deflecting plates 1-2 by the following angular tolerances measured about the tube axis: Pin 5 10 degrees; cap (on same side of tube as Pin 5) 10 degrees.*

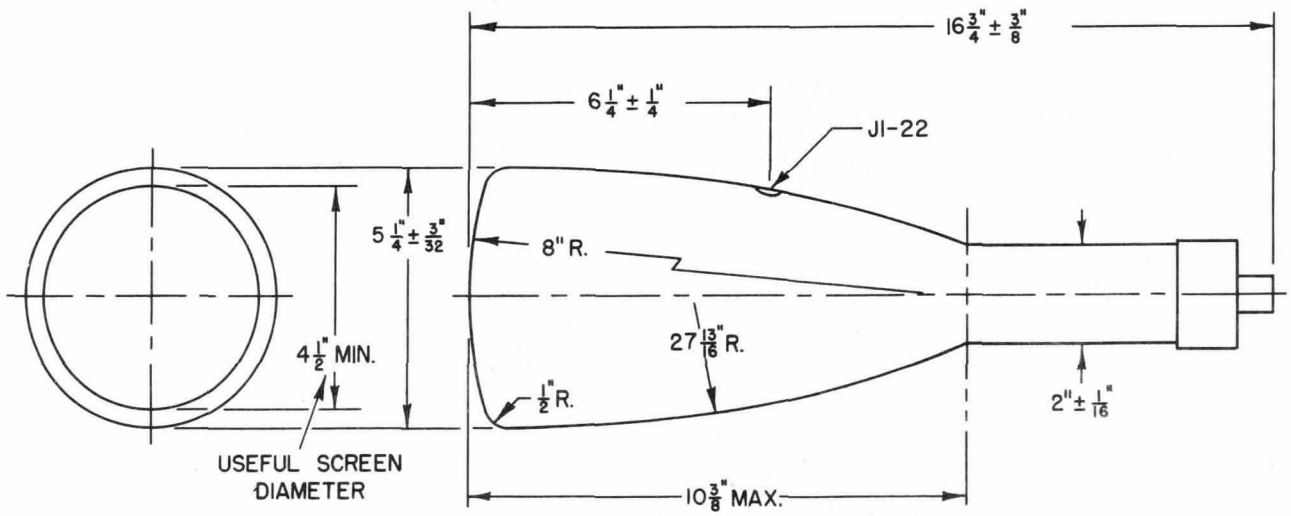

S53005

5CP7A

The Sylvania Type 5CP7A is identical to the Type 5CP1A except it has a blue-white fluorescence, yellow phosphorescence, long persistence phosphor.

5CP11A

The Sylvania Type 5CP11A is identical to the Type 5CP1A except it has blue phosphor and a short persistence.

5CP12

The Sylvania Type 5CP12 is identical to the Type 5CP1A except it has an orange phosphor and a medium long persistence.