LITTON INDUSTRIES

ELECTRON TUBE DIVISION—ELECTRONIC DISPLAY LABORATORY

1476 66TH STREET • EMERYVILLE, CALIFORNIA • OLYMPIC 8-3831

5CGP29 CHROMATRON

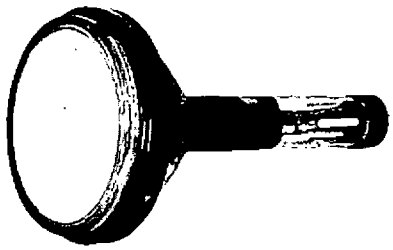

5CGP29 CHROMATRON COLOR TUBE

SINGLE-GUN COLOR TUBE
GLASS ENVELOPE
TWO-COLOR PERSISTENT PHOSPHORS
PHOSPHORS ON FLAT FACE
ALUMINIZED SCREEN
ACTIVE SCREEN AREA 4¼" DIAMETER
SCREEN VOLTAGE UP TO 18,000 VOLTS

High resolution is afforded by phosphor strips of approximately 11 mils width on 12½ mil centers, or 80 color strips per inch. Simple circuitry is adequate for power supplies and color switching. Post-acceleration, inherent in post-deflection focusing (PDF) produces high deflection sensitivity. Color convergence is inherent in the tube, independent of circuit adjustment.

APPLICATIONS

Suggested applications include: target identification, moving target identification (MTI), IFF, anti-jamming, navigational beacons, terrain clearance, plane elevation indicator, collision course indicator, etc.

DATA

GENERAL

Heater voltage (AC or DC) . . . . . 6.3 volts
Heater current . . . . . 0.6 amperes
Direct Interelectrode Capacitances:
  Grid #1 to all other electrodes . . . . . 6 uuf
  Cathode to all other electrodes . . . . . 4 uuf
  Color selectors to each other . . . . . 880 uuf
Phosphors (long persistence) . . . . . P-25 orange
  P-2 green
Focusing Method . . . . . Magnetic
Color Selector Method . . . . . Electrostatic
Deflection Method . . . . . Magnetic
Deflection Angle (Approx.) . . . . . 53°
Length . . . . . 11⅛ in.
Weight . . . . . 1½ lb.

*MAXIMUM RATINGS

Screen (ultor) voltage (Note 1) . . . . . 18,000 DC
Grid #3 voltage . . . . . 12,000 DC
Grid #2 voltage . . . . . 600 DC
Color selector voltage . . . . . 400 peak
Color grid to phosphor plate . . . . . 8,000 DC
Seeker voltage (Note 2) . . . . . 350 DC
Grid #1 voltage:
  Negative bias value . . . . . 200 DC
  Positive bias value 0
  Positive peak value . . . . . 2 DC
Peak heater — cathode voltage:
  Heater neg. with respect to cathode during equip. warm-up period not to exceed 15 seconds . . . . . 410 DC
  After equip. warm-up . . . . . 180 DC
  Heater pos. with respect to cathode . . . . . 180 DC

*design-center values

TYPICAL OPERATION

Screen (ultor) voltage . . . . . 16,000 DC
Grid #3 voltage (Note 3) . . . . 9,000 to 12,000 DC
Color selector voltage . . . . . 300 peak
Seeker voltage . . . . . 100 to 300 DC
Grid #2 voltage . . . . . 300 DC
Grid 1 voltage (Note 4) . . . . . –50 to –105 DC
Focusing coil current (Note 5) . . . . 60 to 80 ma DC
Circuit values:
  Grid #1 circuit resistance . . . . . 1.5 megs. max.

NOTES

1. Screen (ultor) voltage is defined as the total accelerating DC potential between the cathode and the phosphor plate. This anode voltage provides the high potential necessary for the function of post-deflection focusing.

2. Seeker voltage is defined as the DC potential between the color selectors and Grid #3. This voltage is such that the color selectors are negative with respect to Grid #3, and is adjusted for optimum color purity.

3. Color purity is determined by the optimum ratio of the screen voltage to the Grid #3 voltage, seeker voltage, and focus coil positioning.

4. For visual extinction of focused spot.

5. With the JETEC focus coil #109 located so that the center of the focus coil gap is located four inches behind the yoke reference line.

from JETEC release #2278, Sept. 22, 1958

CHROMATRON® 5CGP29

LICENSED UNDER U.S. PATENTS OF CHROMATIC TELEVISION LABORATORIES, INC.

DIMENSIONAL OUTLINE

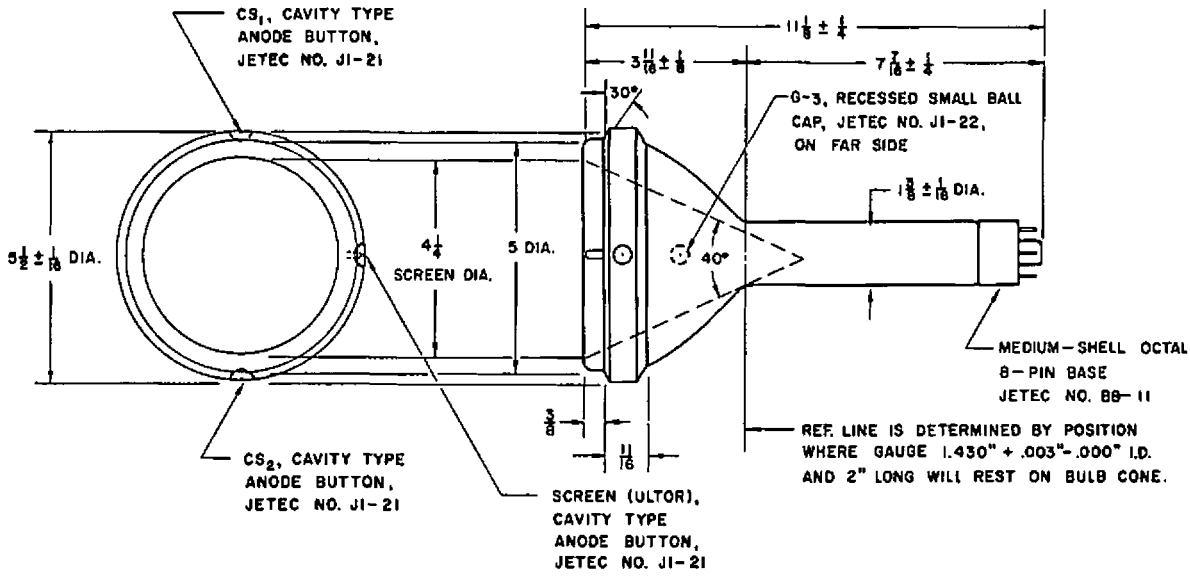

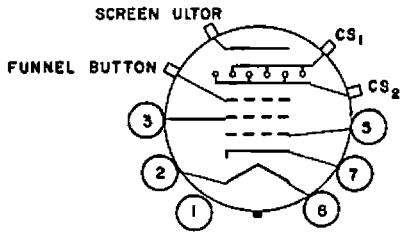

BOTTOM VIEW

PIN 2 — HEATER
PIN 3 — GRID NO. 2
PIN 5 — GRID NO. 1
CS_1, CS_2 — COLOR SELECTORS
PIN 7 — CATHODE
PIN 8 — HEATER