TUNG-SOL

DOUBLE TRIODE

MINIATURE TYPE

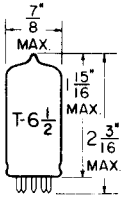

GLASS BULB

COATED UNIPOTENTIAL CATHODE

HEATER

5.6 VOLTS 0.45 AMP.

AC OR DC

ANY MOUNTING POSITION

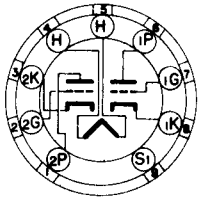

BOTTOM VIEW

MINIATURE BUTTON
9 PIN NOVAL

9AJ

THE 5BQ7A IS A MEDIUM-MU DOUBLE TRIODE USING THE 9 PIN MINIATURE CONSTRUCTION. IT IS INTENDED FOR USE AS THE FIRST RF AMPLIFIER TUBE IN TUNERS OF VHF TELEVISION RECEIVERS OR AS A LOW NOISE IF PRE-AMPLIFIER TUBE IN UHF TELEVISION RECEIVERS EMPLOYING A CRYSTAL MIXER. HIGH TRANSCONDUCTANCE, LOW INPUT CAPACITANCE, LOW INPUT LOADING AND LOW PLATE TO CATHODE CAPACITANCE MAKES IT ESPECIALLY USEFUL IN THE DIRECT-COUPLED RF STAGE OF TELEVISION RECEIVERS UTILIZING A DRIVEN RF-GROUNDED-GRID AMPLIFIER OR THE CASCODE TYPE OF CIRCUIT. THERMAL CHARACTERISTICS OF THE HEATER ARE CONTROLLED SUCH THAT HEATER VOLTAGE SURGES DURING THE WARM-UP CYCLE ARE MINIMIZED PROVIDED IT IS USED WITH OTHER TYPES WHICH ARE SIMILARLY CONTROLLED.

DIRECT INTERELECTRODE CAPACITANCES

WITH EXTERNAL SHIELD #315

	UNIT #1	UNIT #2	
GRID TO PLATE	1.15	1.15	μμf
INPUT	2.85	----	μμf
INPUT (GROUNDED GRID)	----	4.95	μμf
OUTPUT	1.35	----	μμf
OUTPUT (GROUNDED GRID)	----	2.27	μμf
PLATE TO CATHODE (MAX.)	0.15	0.15	μμf
HEATER TO CATHODE	2.65	2.70	μμf
PLATE OF UNIT #1 TO PLATE OF UNIT #2 (MAX.)	0.010		μμf
PLATE OF UNIT #2 TO PLATE AND GRID OF UNIT #1 (MAX.)	0.024		μμf

RATINGS

INTERPRETED ACCORDING TO DESIGN CENTER VALUES

CLASS A_1 AMPLIFIER - EACH TRIODE UNIT

HEATER VOLTAGE	5.6	VOLTS
MAXIMUM HEATER CATHODE VOLTAGE:		
HEATER NEGATIVE WITH RESPECT TO CATHODE		
TOTAL DC AND PEAK	200[A]	VOLTS
HEATER POSITIVE WITH RESPECT TO CATHODE		
DC	100	VOLTS
TOTAL DC AND PEAK	200[A]	VOLTS
MAXIMUM PLATE VOLTAGE	250[A]	VOLTS
MAXIMUM PLATE DISSIPATION	2	WATTS
MAXIMUM CATHODE CURRENT	20	MA.
MAXIMUM GRID CIRCUIT RESISTANCE	0.5	MEGOHM
HEATER WARM-UP TIME (APPROX.)*	11.0	SEC.

[A] UNDER CUT-OFF CONDITIONS, IN RF-GROUNDED-GRID CIRCUITS WITH DIRECT-COUPLED DRIVE, IT IS PERMISSIBLE FOR THIS VOLTAGE TO BE AS HIGH AS 300 VOLTS.

* HEATER WARM-UP TIME IS DEFINED AS THE TIME REQUIRED FOR THE VOLTAGE ACROSS THE HEATER TO REACH 80% OF ITS RATED VOLTAGE AFTER APPLYING 4 TIMES RATED HEATER VOLTAGE TO A CIRCUIT CONSISTING OF THE TUBE HEATER IN SERIES WITH A RESISTANCE OF VALUE 3 TIMES THE NOMINAL HEATER OPERATING RESISTANCE.

CONTINUED ON FOLLOWING PAGE

PRINTED IN U.S.A.

CONTINUED FROM PRECEDING PAGE

TYPICAL OPERATING CONDITIONS AND CHARACTERISTICS

CLASS A_1 AMPLIFIER – EACH UNIT

	DESIGN CENTER VALUES	
HEATER VOLTAGE	5.6	VOLTS
HEATER CURRENT	0.45	AMP.
PLATE VOLTAGE	150	VOLTS
CATHODE BIAS RESISTOR	220	OHMS
AMPLIFICATION FACTOR	39	
PLATE RESISTANCE	6 100	OHMS
TRANSCONDUCTANCE	6 400	µMHOS
PLATE CURRENT	9	MA.
GRID VOLTS (APPROX.) FOR I_b = 10 µAMP.	-10	VOLTS

PUSH-PULL RF GROUNDED GRID CIRCUIT – EACH UNIT

HEATER VOLTAGE	5.6	VOLTS
HEATER CURRENT	0.45	AMP.
PLATE VOLTAGE	150	VOLTS
GRID VOLTAGE (OBTAINED FROM CATHODE RESISTOR)	-2	VOLTS
CATHODE RESISTOR (COMMON TO BOTH UNITS)	100	OHMS
PLATE CURRENT	10	MA.

RF GROUNDED GRID CIRCUIT WITH DIRECT-COUPLED DRIVE

UNIT #1 (DRIVER TUBE) IS DIRECTLY COUPLED TO UNIT #2 (DRIVEN RF-GROUNDED-GRID AMPLIFIER TUBE) AS SHOWN IN ACCOMPANYING CIRCUIT.

	UNIT #1	UNIT #2	
HEATER VOLTAGE	5.6	5.6	VOLTS
HEATER CURRENT	0.45	0.45	AMP.
PEAK HEATER CATHODE VOLTAGE: HEATER NEGATIVE WITH RESPECT TO CATHODE	1	250	VOLTS
PLATE SUPPLY VOLTAGE	250	250	VOLTS
PLATE VOLTAGE	135	115	VOLTS
GRID VOLTAGE	-1	---	VOLTS
GRID RESISTOR	---	0.5	MEGOHM
PLATE CURRENT	10	10	MA.
GRID CURRENT	0	0	MA.
GRID VOLTAGE (APPROX.) FOR I_b = 10 µAMP.	-14	---	VOLTS.

SIMILAR TYPE REFERENCE: *Except for heater ratings and heater warm-up time the 5BQ7A is identical to the 6BQ7A.*

TUNG-SOL

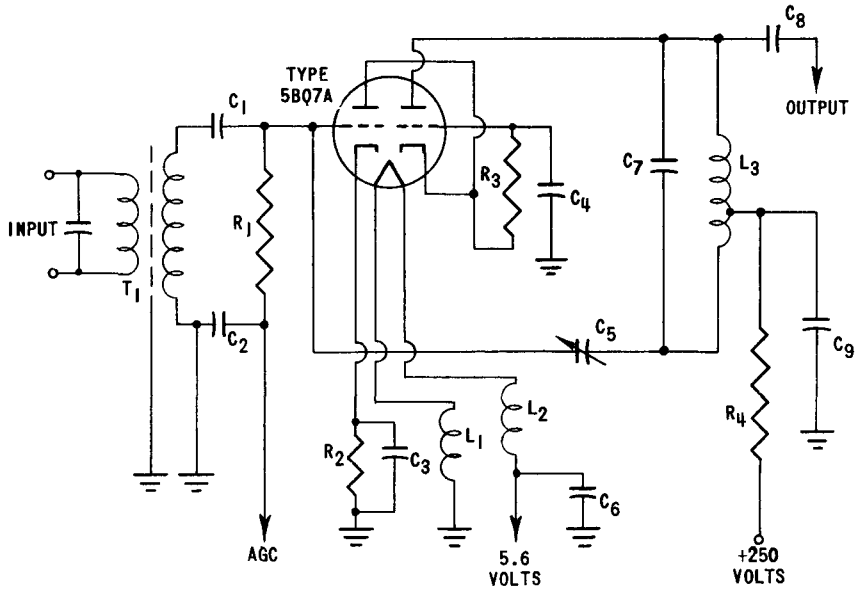

C1: 33 uuf, 400 VOLTS
C2: 1000 uuf, 400 VOLTS
C3: 1000 uuf, 400 VOLTS
C4: 1000 uuf, 400 VOLTS
C5: 0.5 to 1.5 uuf, 400 VOLTS
C6: 1000 uuf, 400 VOLTS
C7: 2 uuf, 400 VOLTS
C8: 33 uuf, 400 VOLTS
C9: 1000 uuf, 400 VOLTS

L1, L2: BIFILAR CHOKES, EACH 10 TURNS NO. 18 ENAMEL WIRE 1/4" COIL FORM
L3: TUNED CIRCUIT ELEMENT OF TUNER. VALUE DEPENDS ON DISTRIBUTED CIRCUIT CAPACITANCES. TO DETERMINE TAP POINT, TAP DOWN TO 80 TO 90% OF TOTAL NUMBER OF TURNS

R1: 10000 OHMS, 0.5 WATT
R2: 100 OHMS, 0.5 WATT
R3: 500000 OHMS, 0.5 WATT
R4: 100 OHMS, 0.5 WATT
T1: TUNED CIRCUIT ELEMENT OF TUNER. VALUE DEPENDS ON DISTRIBUTED CIRCUIT CAPACITANCES.

DRIVEN RF-GROUNDED GRID AMPLIFIER CIRCUIT WITH DIRECT COUPLED DRIVE

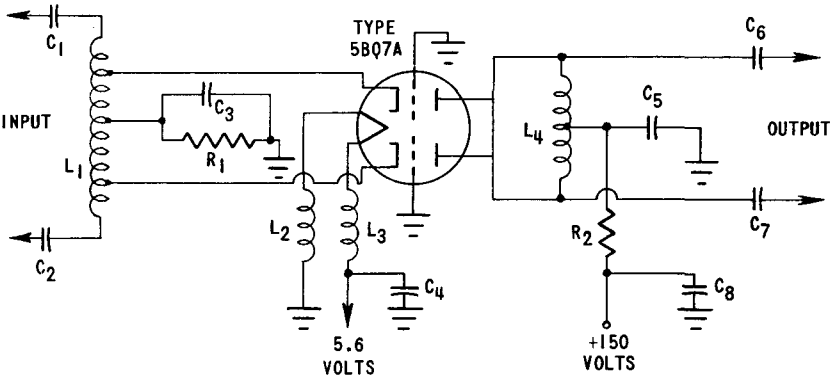

C1 C2 C3 C4 C5: 1000 uuf, 400 VOLTS
C6 C7: 100 uuf, 400 VOLTS
C8: 1000 uuf, 400 VOLTS

L1 L4: TUNED CIRCUIT ELEMENTS OF TUNER. VALUES DEPEND ON DISTRIBUTED CIRCUIT CAPACITANCES.

L2 L3: BIFILAR CHOKES, EACH 10 TURNS OF NO. 18 ENAMEL WIRE, 1/4" COIL FORM.
R1 R2: 100 OHMS, 0.5 WATT

PUSH-PULL RF GROUNDED-GRID CIRCUIT

PRINTED IN U.S.A.

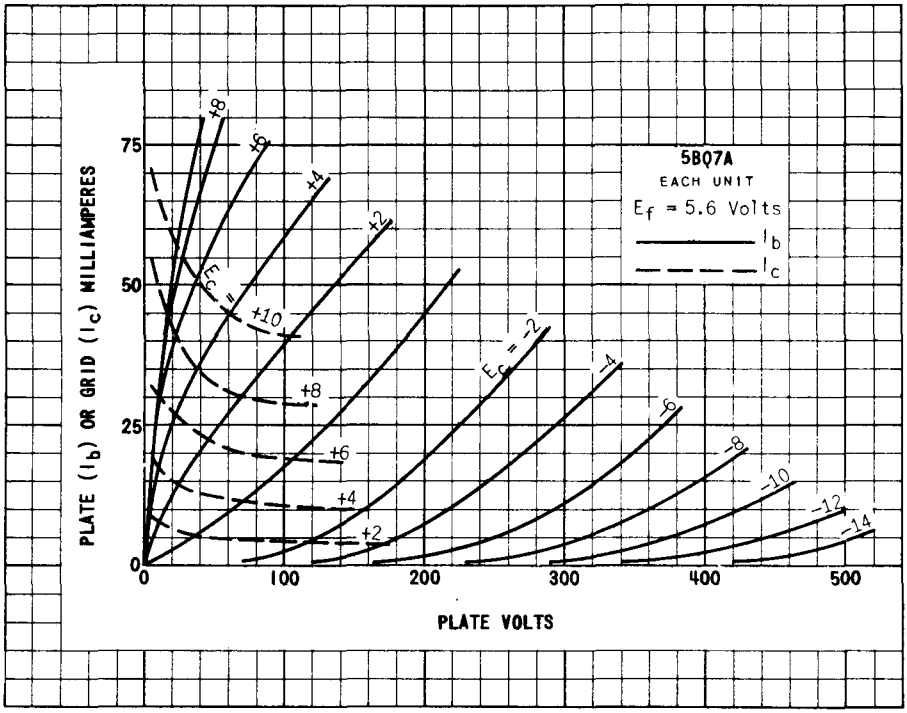
5BQ7A
EACH UNIT
Ef = 5.6 Volts
Ib
Ic
PLATE (Ib) OR GRID (Ic) MILLIAMPERES
PLATE VOLTS
0
25
50
75
100
200
300
400
500
+8
+6
+4
+2
Ec = +10
+8
+6
+4
+2
Ec = -2
-4
-6
-8
-10
-12
-14

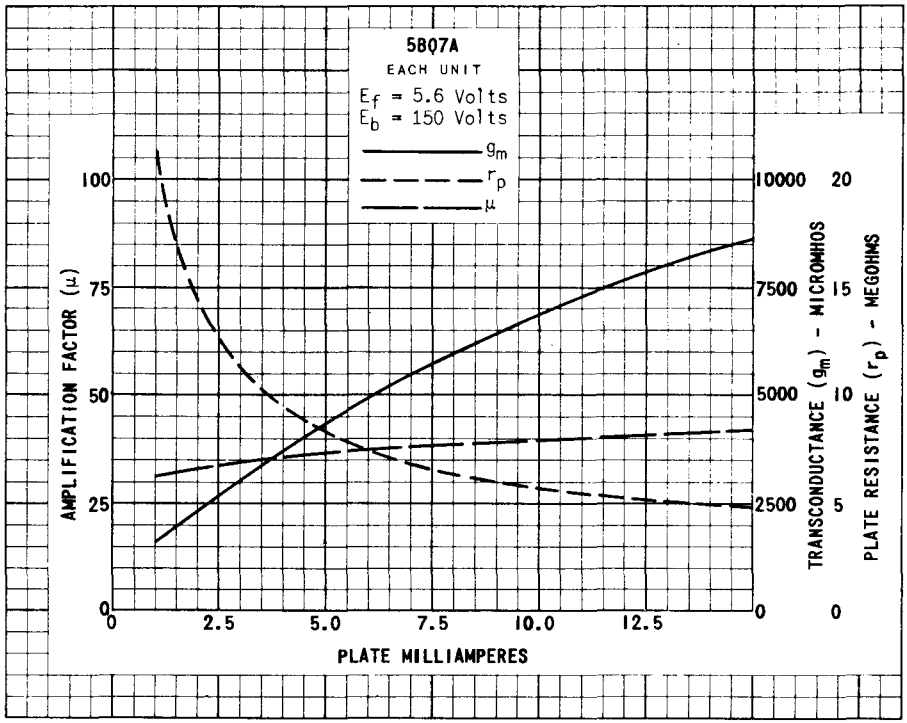
5BQ7A
EACH UNIT
Ef = 5.6 Volts
Eb = 150 Volts
gm
rp
μ
AMPLIFICATION FACTOR (μ)
TRANSCONDUCTANCE (gm) - MICROMHOS
PLATE RESISTANCE (rp) - MEGOHMS
PLATE MILLIAMPERES
0
25
50
75
100
2.5
5.0
7.5
10.0
12.5
2500
5000
7500
10000
5
10
15
20

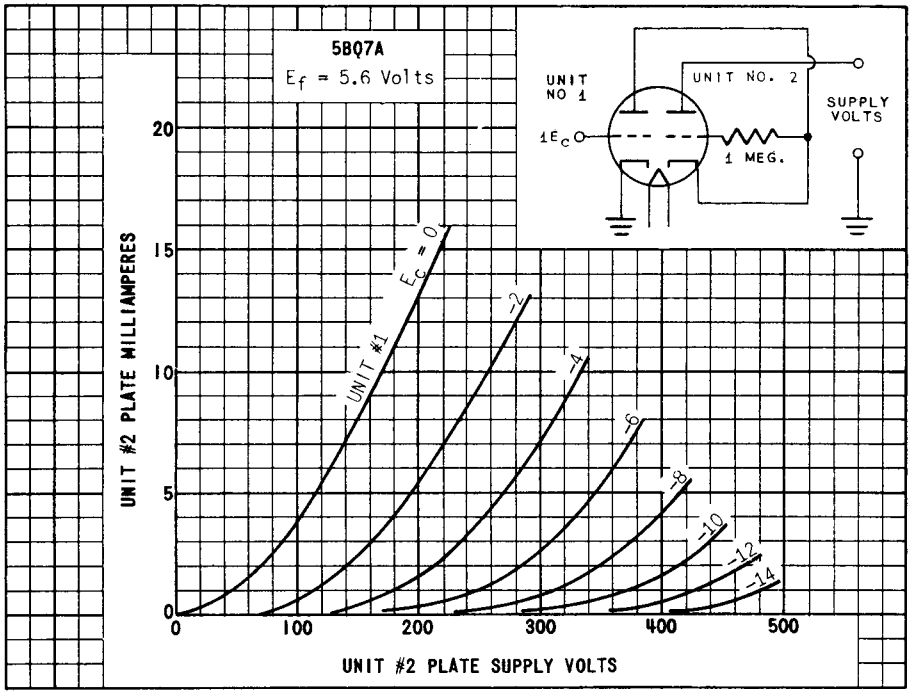

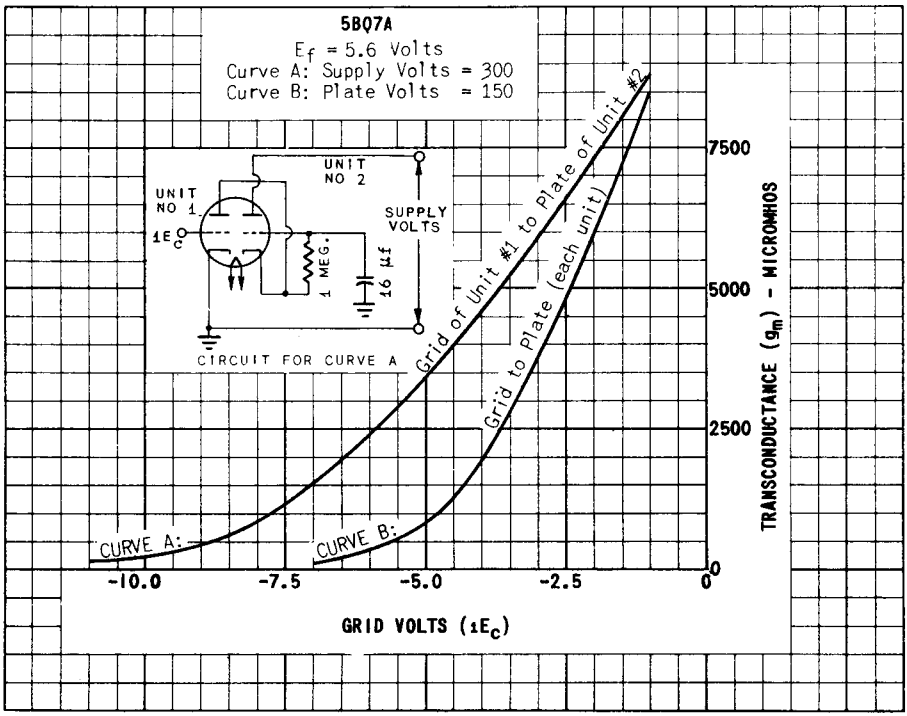

PRINTED IN U. S. A.