—Standard Valves—

VALVE TYPE 5B/500-B

RF PENTODE.

SPECIFICATION.

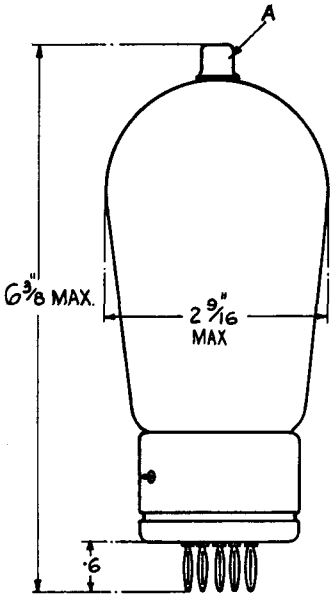

Cathode.

Indirectly heated oxide coated.
Constant voltage type.

Base.

Special British 7-pin.
Anode connected to top cap type B.

Dimensions.

Max. overall length	$6\frac{3}{8}$" (15·9 cms.)
Maximum diameter	$2\frac{9}{16}$" (6·45) cms.)
Net weight	0·4 lbs. (180 gms.)

Constants.

Heater voltage	10 volts
Nominal heater current	1·3 amps.
*Mutual conductance	4·5 mA. per volt
Grid–anode capacity	0·15 $\mu\mu$F.
Input capacity	20 $\mu\mu$F.
Output capacity	7 $\mu\mu$F.

* *at* $V_p = 1{,}000$, $V_{g1} = -16$, $V_{g2} = 200$, $V_{g3} = 0$ volts.

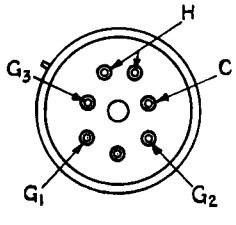

LIMITING CONDITIONS FOR SAFE OPERATION.

Maximum direct anode voltage	1,250 volts
Maximum direct screen voltage	400 volts
Maximum direct suppressor voltage	40 volts
Maximum anode dissipation	50 watts
Maximum screen dissipation	10 watts
Maximum frequency for above ratings	20 Mc.

Tentative data

—Standard Valves—

TYPICAL OPERATING CONDITIONS.

	Class C Amplifier Unmodulated
Direct anode voltage	1,200 volts
Direct screen voltage	200 volts
Direct suppressor voltage	0 volts
Control grid bias	—70 volts
Anode current	77 mA.
Grid current	10 mA.
Screen current	14 mA.
Peak RF input voltage	100 volts
Peak output power	60 watts
RF input power	0·9 watts

	Class C Amplifier Suppressor grid modulated
Direct anode voltage	1,200 volts
Direct screen voltage	200 volts
Direct suppressor voltage	—60 volts
Control grid bias	—70 volts
Anode current	38 mA.
Grid current	10 mA.
Screen current	14 mA.
Peak RF input voltage	100 volts
Carrier output	15 watts

	Class C Telephony Grid Modulated
Direct anode voltage	1,200 volts
Direct screen voltage	200 volts
Direct suppressor voltage	0 volts
Control grid bias	—145 volts
Anode current	45 mA.
Screen current	4 mA.
Grid current	1·5 mA.
Peak RF input voltage	150 volts
Peak power output	64 watts
Carrier output	16 watts

	Class B Telephony Grid Modulated
Direct anode voltage	1,200 volts
Direct screen voltage	200 volts
Direct suppressor voltage	0 volts
Control grid bias	—30 volts
Anode current	40 mA.
Screen current	3 mA.
Peak output power	56 watts
Carrier output	14 watts

PRINTED IN ENGLAND

—Standard Valves—

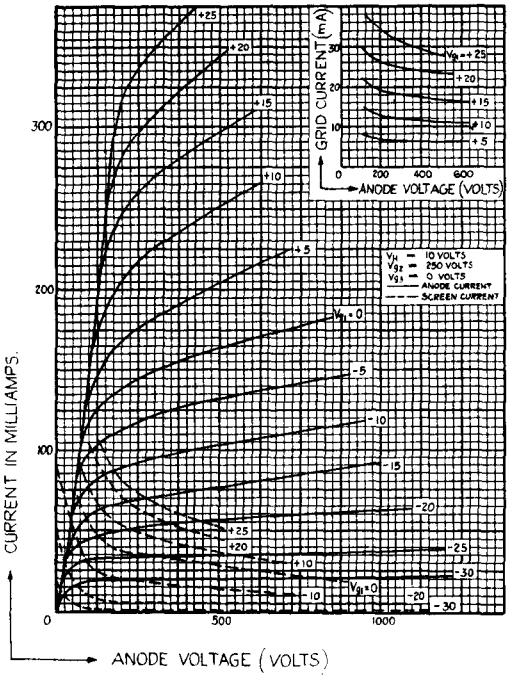

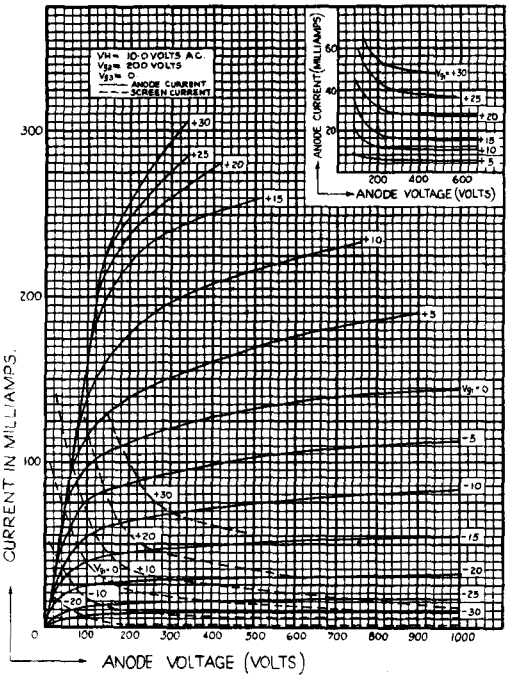

PRINTED IN
ENGLAND