Vacuum tube 5AR4 Tung - Sol is a two - plate cenotron in the glass bulb with octal base, wiht equipotential cathode, designed for two - nalf - period rectification of alternating current in the midpoint circuits in radio engineering devices.

Pin arrangement

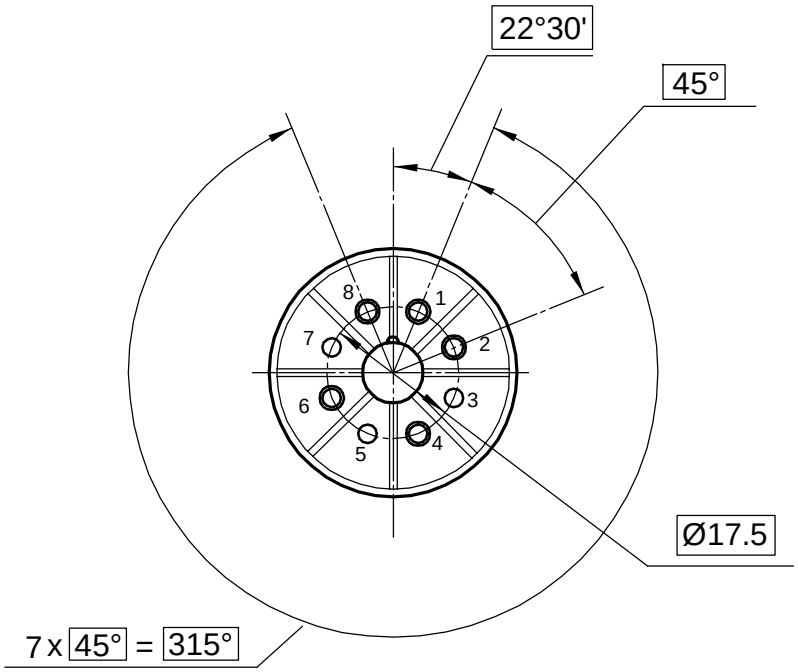

Electrode -to - lead connection diagram

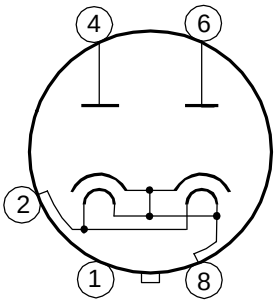

Dimensions

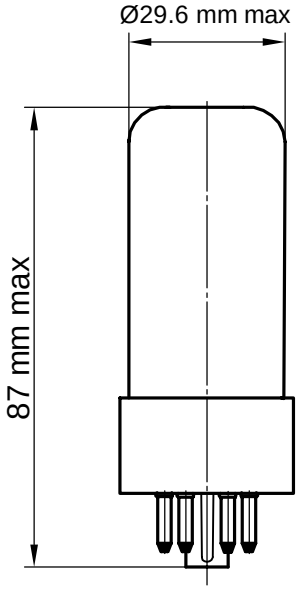

Lead designation	Name of electrode
1	Free
2	Heater
3, 5, 7	No
4	First diode plate
6	Second diode plate
8	Cathode, heater

Electrical parameters

Parameters, conditions and units	Nominal	
	min	max
Heater current, A	1.7	2.1
Diode anod current, mA (at: filament voltage 5.0 V, plate voltage 17 V)	180	280
Rectified current, mA (at: filament voltage 5.0 V, the voltage of the secondary winding of the transformer, effective, 2 x 550 V, load resistance 3000 Ω, capacitance in the cathode chain, 40 µF)	180	—
First and second diodes plate current difference, % (at: filament voltage 5.0 V, plate voltage 17 V)		± 30

Limiting Values

Parameters, units	Nominal	
	min	max
Filament voltage, V	4.5	5.5
Rectified current (average), mA	—	250
Anode current amplitude, mA	—	825
Current surge at the turn -on moment , A	—	3.7
Anod reverse voltage amplitude, V	—	1500
Temperature at the most heated part of the envelope, K°	—	473

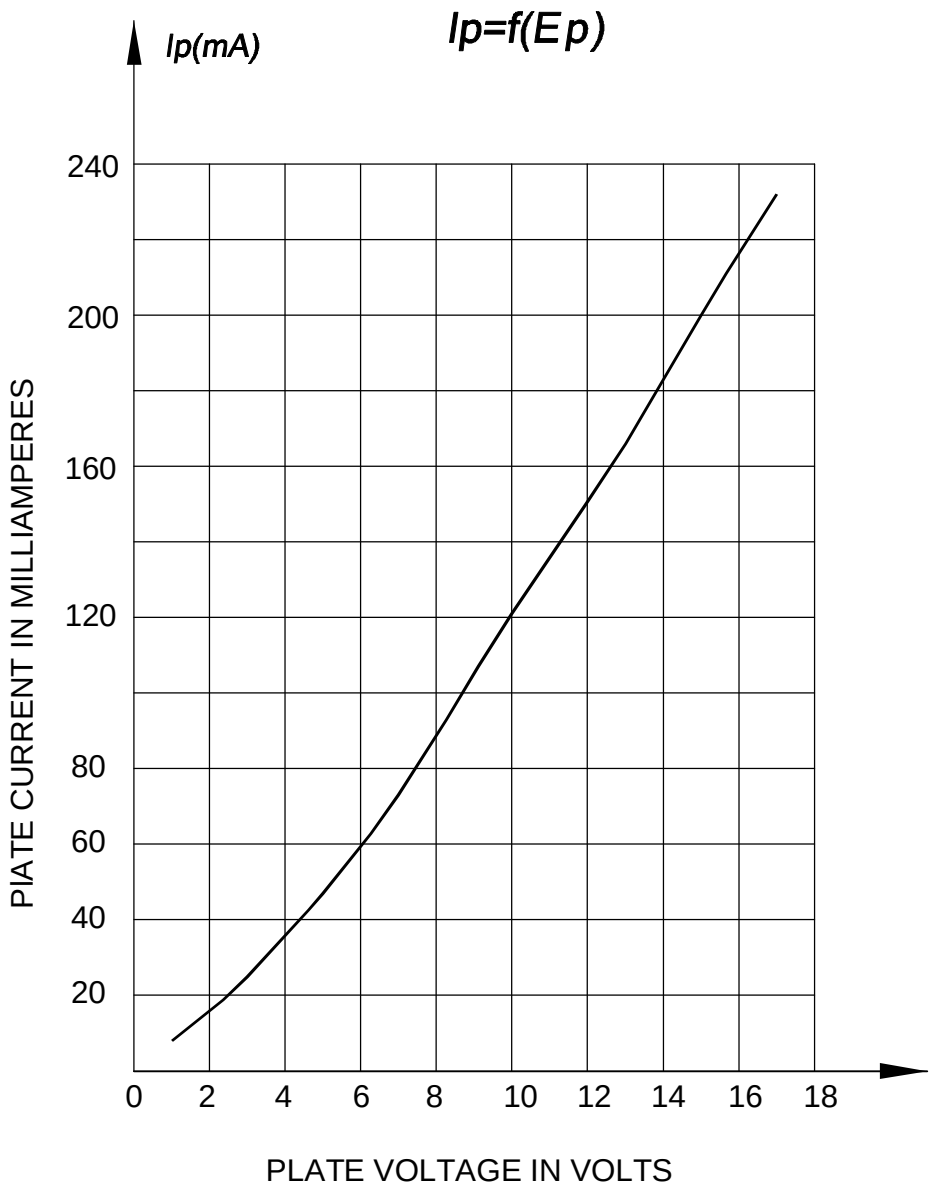
Ip=f(Ep)
Ip(mA)
240
200
160
120
80
60
40
20
PIATE CURRENT IN MILLIAMPERES
0
2
4
6
8
10
12
14
16
18
PLATE VOLTAGE IN VOLTS