CHARACTERISTICS

GENERAL DATA

Focusing Method				Electrostatic
Deflection Method				Electrostatic
Types*	5AQP1	5AQP2	5AQP7	5AQP11
	5AQP1A	5AQP2A	5AQP7A	5AQP11A
	5AQP1B	5AQP2B	5AQP7B	5AQP11B
Fluorescence	Green	Green	Blue	Blue
Phosphorescence	—	Green	Yellow	—
Persistence	Medium	Medium	Long	Short
Faceplate				
5AQP-, 5AQP-A				Clear
5AQP-B				Clear, Aluminized

*In addition to the types shown, the 5AQP- can be supplied with several other screen phosphors.

ELECTRICAL DATA

Heater Voltage	6.3 Volts
Heater Current	0.6 ± 10 % Ampere

Direct Interelectrode Capacitances

	Min.	Max.
Cathode to All Other Electrodes	2.7	5.0 μμf
Grid No. 1 to All Other Electrodes	3.7	6.9 μμf
Between Deflecting Plates 1-2[1]	2.4	4.5 μμf
Between Deflecting Plates 3-4[1]	0.8	1.6 μμf
Deflecting Plate 1[1] to All Other Electrodes	5.0	9.3 μμf
Deflecting Plate 2[1] to All Other Electrodes	5.0	9.3 μμf
Deflecting Plate 3[1] to All Other Electrodes	3.3	6.3 μμf
Deflecting Plate 4[1] to All Other Electrodes	3.3	6.3 μμf

MECHANICAL DATA

Minimum Useful Screen Diameter	4½ Inches
Bulb	J42P
Base (Medium Shell Diheptal 12-Pin)	B12-37
Basing	14G
Base Alignment	
D1-D2 Trace Aligns With Pin No. 5 and Tube Axis[4]	±10 Degrees
Angle Between D1-D2 and D3-D4 Traces (5AQP-)[4]	90 ± 1 Degree
Angle Between D1-D2 and D3-D4 Traces (5AQP-A, 5AQP-B)[4]	90 ± 0.8 Degree
Weight (Approx.)	2 Pounds

RATINGS

MAXIMUM RATINGS (Absolute Maximum Values)

Maximum Anode No. 2 Voltage[2]	4400 Volts	dc
Minimum Anode No. 2 Voltage (5AQP-B Only)	1500 Volts	dc
Anode No. 1 Voltage	1650 Volts	dc
Grid No. 1 Voltage		
Negative Bias Value	220 Volts	dc
Positive Bias Value	0 Volts	dc
Positive Peak Value	0 Volts	
Peak Heater-Cathode Voltage		
Heater Negative with Respect to Cathode	200 Volts	
Heater Positive with Respect to Cathode	200 Volts	
Peak Voltage Between Anode No. 2 and Any Deflecting Plate	400 Volts	

QUICK REFERENCE DATA

Oscilloscope Tube
5″ Direct Viewed
Round Glass Type
Electrostatic Deflection
Electrostatic Focus
Flat Face
Clear Faceplate
5AQP-A Closer Tolerances
5AQP-B Closer Tolerances, Aluminized

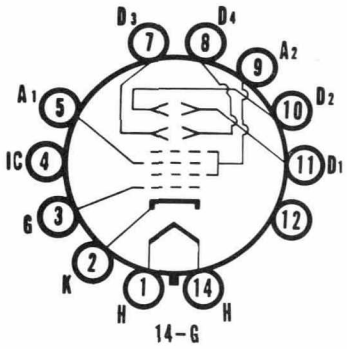

SYLVANIA
ELECTRONIC TUBES
A Division of
Sylvania Electric Products Inc.
PICTURE TUBE OPERATIONS
SENECA FALLS, NEW YORK
Prepared and Released By The
TECHNICAL PUBLICATIONS SECTION
EMPORIUM, PENNSYLVANIA
MARCH, 1962

File Under
SPECIAL AND GENERAL
PURPOSE CATHODE RAY TUBES

TYPICAL OPERATING CONDITIONS

Anode No. 2 Voltage	2500 Volts	dc
Anode No. 1 Voltage for Focus	0 to 300 Volts	dc
Grid No. 1 Voltage Required for Cutoff[3]	−34 to −56 Volts	dc
Deflection Factor[4]		
Deflecting Plates 1-2	40 to 50 Volts	dc/Inch
Deflecting Plates 3-4	31.5 to 38.5 Volts	dc/Inch
P1 Light Output[5]	15 Ft. L.	Min.
Modulation[5]	40 Volts	dc Max.
Line Width A[5]	.030 Inches	Max.
Anode No. 2 Current[5]	400 μa	dc Max.
Deflection Factor Uniformity[6]	1 Percent	Max.
Pattern Distortion at 75 % of Useful Scan[7] (5AQP-)	2 Percent	Max.
Pattern Distortion at 100 % of Useful Scan[8] (5AQP-A, 5AQP-B)	1 Percent	Max.
Spot Position[9]	Within a 5/16 Inch Radius Circle	
Useful Scan (Centered on Tube Face)	4 x 4 Inches	Min.

CIRCUIT VALUES

Grid No. 1 Circuit Resistance	1.5 Megohms Max.
Deflection Circuit Resistance[10]	1.0 Megohms Max.

NOTES:

1. *Deflecting Plate 1 is Pin No. 11*
   Deflecting Plate 2 is Pin No. 10
   Deflecting Plate 3 is Pin No. 7
   Deflecting Plate 4 is Pin No. 8
2. *The product of Anode No. 2 voltage and average Anode No. 2 current should be limited to 6.0 watts.*
3. *Visual extinction of undeflected focused spot.*
4. *Positive voltage on D1 deflects beam approximately toward Pin No. 5.*
   Positive voltage on D3 deflects beam approximately toward Pin No. 2.
5. *Measured in accordance with MIL-E-1 specification on a P1 screen at a brightness of 15 Ft. L. on a raster size of 2 x 2 inches.*
6. *The deflection factors at 75 % of useful scan and at 25 % of useful scan shall not differ by more than the indicated value.*
7. *All edges of a raster pattern, adjusted so its widest points just touch the sides of a 3.075 inch square, will fall within the area bounded by the 3.075 inch square and an inscribed 2.925 inch square.*
8. *The edges of a raster pattern, adjusted so its widest points just touch the sides of a 4.000 inch square, will fall within the area bounded by the 4.000 inch square and an inscribed 3.916 inch square, except at the corners where the geometry of the tube makes this impossible.*
9. *Centered on the tube face with the tube shielded and with all deflection plates connected to Anode No. 2.*
10. *It is recommended that the deflecting electrode circuit resistances be approximately equal.*
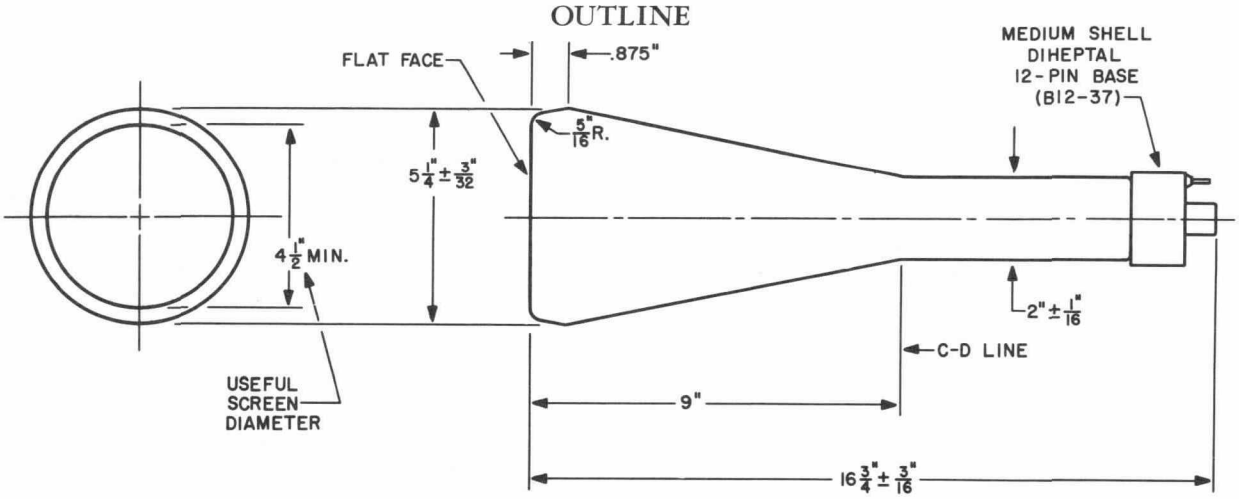
OUTLINE