CHARACTERISTICS

GENERAL DATA

Focusing Method . . . . . Electrostatic
Deflection Method . . . . . Electrostatic

Types*	5ADP1 5ADP1A 5ADP1B	5ADP2 5ADP2A 5ADP2B	5ADP7 5ADP7A 5ADP7B	5ADP11 5ADP11A 5ADP11B	5ADP31A
Fluorescence	Green	Green	Blue	Blue	Green
Phosphorescence	—	Green	Yellow	—	Green
Persistence	Medium	Medium	Long	Short	Medium

Faceplate
5ADP- . . . . . Clear
5ADP-A, 5ADP-B . . . . . Clear, Aluminized

*In addition to the types shown, the 5ADP-, 5ADP-A, and 5ADP-B can be supplied with several other screen phosphors.

ELECTRICAL DATA

Heater Voltage . . . . . 6.3 Volts
Heater Current . . . . . 0.6 ± 10 % Ampere
Direct Interelectrode Capacitances

	Min.	Max.
Cathode to All Other Electrodes	3.1	5.8 μμf
Grid No. 1 to All Other Electrodes	4.2	7.9 μμf
Between Deflecting Plate 1-2	1.7	3.1 μμf
Between Deflecting Plates 3-4	0.7	1.3 μμf
Deflecting Plate 1[1] to All Other Electrodes Except D2	2.7	6.1 μμf
Deflecting Plate 2[1] to All Other Electrodes Except D1	2.7	6.1 μμf
Deflecting Plate 3[1] to All Other Electrodes Except D4	2.1	4.0 μμf
Deflecting Plate 4[1] to All Other Electrodes Except D3	2.1	5.0 μμf

MECHANICAL DATA

Minimum Useful Screen Diameter . . . . . 4 ½ Inches
Bulb Contact (Recessed Small Ball Cap) J1-22
Bulb J42K
Base (Medium Shell Diheptal 12-Pin) B12-37
Basing 14J
Base Alignment
D1-D2 Trace Aligns with Pin No. 5 and Tube Axis . . . ±10 Degrees
Positive Voltage on D1 Deflects Beam Approx. Toward Pin No. 5
Positive Voltage on D3 Deflects Beam Approx. Toward Pin No. 2
Angle Between Traces D1-D2 and D3-D4
5ADP- . . . . . 90 ± 1 Degrees
5ADP-A, 5ADP-B . . . . . 90 ± 0.8 Degrees
Bulb Contact Alignment
J1-22 Contact Aligns with D1-D2 Trace . . . . . ±10 Degrees
J1-22 Contact on Same Side as Pin No. 5
Weight (Approx.) . . . . . 2 ¼ Pounds

QUICK REFERENCE DATA

Oscilloscope Tube
5″ Direct Viewed
Round Glass Type
Flat Clear Faceplate
Electrostatic Focus
Electrostatic Deflection
5ADP-A, 5ADP-B—Aluminized and Closer Tolerances
5ADP-B—Lower Minimum A3 Voltage

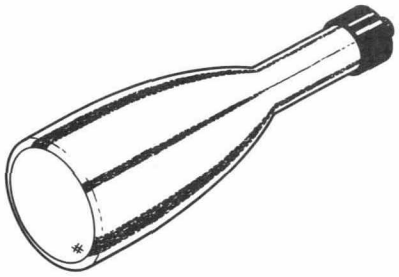

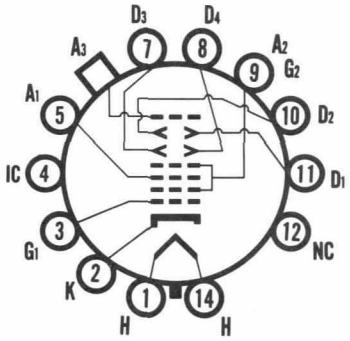

14-J

SYLVANIA
ELECTRONIC TUBES

A Division of
Sylvania Electric Products Inc.

PICTURE TUBE
OPERATIONS

SENECA FALLS, NEW YORK

Prepared and Released By The
TECHNICAL PUBLICATIONS SECTION
EMPORIUM, PENNSYLVANIA

MAY, 1962

File Under
SPECIAL AND GENERAL
PURPOSE CATHODE RAY TUBES

RATINGS

MAXIMUM RATINGS (Absolute Maximum Values)

Maximum Anode No. 3 Voltage	6600 Volts	dc
Minimum Anode No. 3 Voltage (5ADP-, 5ADP-B)	1500 Volts	dc
Minimum Anode No. 3 Voltage (5ADP-A)	2500 Volts	dc
Anode No. 2 Voltage[2]	2860 Volts	dc
Radio of Anode No. 3 Voltage to Anode No. 2 Voltage	2.3:1 Max.	
Anode No. 1 Voltage	1100 Volts	dc
Grid No. 1 Voltage		
Negative Bias Value	200 Volts	dc
Positive Bias Value	0 Volts	dc
Positive Peak Value	2 Volts	
Peak Heater-Cathode Voltage		
Heater Negative with Respect to Cathode	180 Volts	dc
Heater Positive with Respect to Cathode	180 Volts	dc
Peak Voltage Between Anode No. 2 and Any Deflection Plate	550 Volts	

TYPICAL OPERATING CONDITIONS

Anode No. 3 Voltage	3000 Volts	dc
Anode No. 2 Voltage	1500 Volts	dc
Anode No. 1 Voltage for Focus	300 to 515 Volts	dc
Grid No. 1 Voltage Required for Cutoff[3]	−34 to −56 Volts	dc
Deflection Factor		
Deflecting Plates 1-2[4]	40 to 50 Volts	dc/Inch
Deflecting Plates 3-4[5]	30.5 to 37.5 Volts	dc/Inch
Modulation[6,13]	45 Volts	Max.
Line Width[6,13]	.030 Inches	Max.
P1 Light Output[6,13] (5ADP-)	15 Ft. L.	Min.
P1 Light Output[6,13] (5ADP-A, 5ADP-B)	22 Ft. L.	Min.
Deflection Factor Uniformity[8] (5ADP-)	2 Percent	Max.
Deflection Factor Uniformity[7] (5ADP-A, 5ADP-B)	1.5 Percent	Max.
Pattern Distortion with 75 % Useful Scan[9] (5ADP-)	2 ½ Percent	Max.
Pattern Distortion with 100 % Useful Scan[10] (5ADP-A, 5ADP-B)	1.5 Percent	Max.
Undeflected Spot Position[11]	Within a 5/16 Inch Radius Circle	
Useful Scan	± 2 Inches From Tube Face Center or a Total 4 Inches Minimum	

CIRCUIT VALUES

Grid No. 1 Circuit Resistance	1.5 Megohms Max.
Resistance in Any Deflecting Plate Circuit[12]	5 Megohms Max.

NOTES:

1. *Deflecting Plate 1 is Pin No. 11*
   Deflecting Plate 2 is Pin No. 10
   Deflecting Plate 3 is Pin No. 7
   Deflecting Plate 4 is Pin No. 8
2. *The product of the Anode No. 2 Voltage and the Average Anode No. 2 Current should be limited to 6 watts.*
3. *Visual extinction of undeflected focused spot.*
4. *Deflecting Plates 1-2 are nearer the screen.*
5. *Deflecting plates 3-4 are nearer the base.*
6. *Measured in accordance with MIL-E-1.*
7. *The deflection factor (for both D1-D2 and D3-D4 plate pairs separately) for any deflection of less than 90 % of the useful scan will not differ from the deflection factor for a deflection at 30 % of the useful scan by more than 1 ½ %.*
8. *The deflection factor (for both D1-D2 and D3-D4 plate pairs separately) for a deflection of less than 75 % of the useful scan will not differ from the deflection factor for a deflection at 25 % of the useful scan by more than the indicated value.*
9. *All sides of a raster pattern adjusted so its widest points just touch the sides of a 3.075 inch square will fall within the area bounded by the 3.075 inch square and an inscribed 2.925 inch square.*
10. *All edges of a raster pattern adjusted so its widest points just touch the sides of a 4.000 inch square will fall within the area bounded by the 4.000 inch square and an inscribed 3.880 inch square, except at the corners where the geometry of the tube makes this impossible.*
11. *Centered on tube face with the tube shielded and with all deflection plates connected to Anode No. 2.*
12. *It is recommended that the deflecting electrode circuit resistances be approximately equal.*
13. *Anode No. 3 current = 25 μa when making this measurement on Type 5ADP-.*

WARNING:

X-ray radiation shielding may be necessary to protect against possible danger of personal injury from prolonged exposure at close range if this tube is operated at higher than the manufacturer's Maximum Rated Anode Voltage or 16,000 volts, whichever is less.

OUTLINE

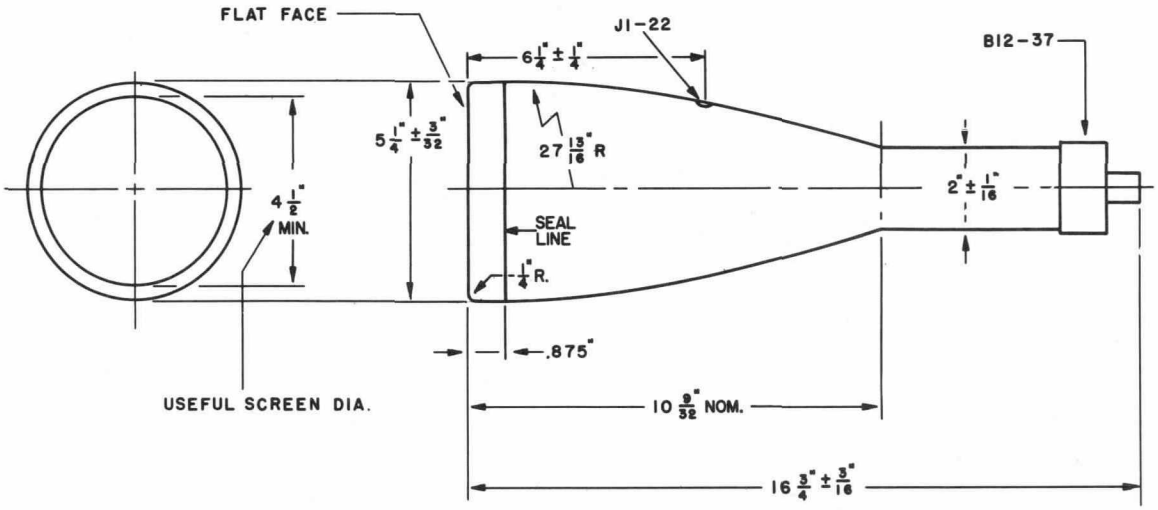

S58013