SYLVANIA

engineering data service

SYLVANIA

5ABP1
5ABP*

CHARACTERISTICS

GENERAL DATA

Focusing Method . . . . . Electrostatic
Deflection Method . . . . . Electrostatic

Types*	5ABP1	5ABP4	5ABP7	5ABP11
Fluorescence	Green	White	Blue	Blue
Phosphorescence	.....	.....	Yellow	.....
Persistence	Medium	Medium	Long	Short

Faceplate . . . . . Clear

**In addition to the types shown, the 5ABP- can be supplied with several other screen phosphors.*

ELECTRICAL DATA

Heater Voltage . . . . . 6.3 Volts
Heater Current . . . . . 0.6 Ampere
Direct Interelectrode Capacitances (Nominal)
- Cathode to All Other Electrodes . . . . . 5.0 $\mu\mu f$
- Grid No. 1 to All Other Electrodes . . . . . 8.0 $\mu\mu f$
- Between Deflecting Plates 1-2 . . . . . 2.5 $\mu\mu f$
- Between Deflecting Plates 3-4 . . . . . 1.3 $\mu\mu f$
- Deflecting Plate 1^1 to All Other Electrodes . . . . 9.0 $\mu\mu f$
- Deflecting Plate 2^1 to All Other Electrodes . . . . 9.0 $\mu\mu f$
- Deflecting Plate 3^1 to All Other Electrodes . . . . 5.0 $\mu\mu f$
- Deflecting Plate 4^1 to All Other Electrodes . . . . 6.0 $\mu\mu f$

MECHANICAL DATA

Minimum Useful Screen Diameter . . . . . 4-9/16 Inches
Bulb Contact (Recessed Small Ball Cap) J1-22
Bulb J42K
Base (Medium Shell Diheptal 12-Pin) B12-37
Basing 14J
Base Alignment

The plane through the tube axis and each of the following items may vary from the trace produced by D1 and D2 by the following angular tolerances (measured about the tube axis): Pin 5, 10 Degrees; side terminal (on same side of tube as Pin No. 5), 10 Degrees.

Angle between D1-D2 trace and D3-D4 trace is 90 ± 1.5 Degrees.

Weight (approx.) . . . . . 2½ Pounds
Mounting Position . . . . . Any

QUICK REFERENCE DATA

Oscilloscope Tube
5″ Direct Viewed
Round Glass Type
Flate Faceplate
Clear Faceplate
Electrostatic Focus
Electrostatic Deflection
High Sensitivity
Post Deflection Acceleration.

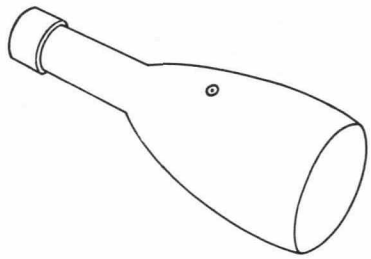

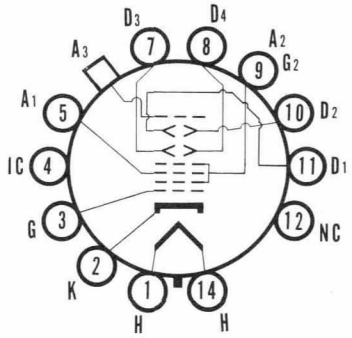

14-J

SYLVANIA ELECTRIC PRODUCTS INC.
TELEVISION PICTURE TUBE DIVISION
SENECA FALLS, NEW YORK

Prepared and Released By The TECHNICAL PUBLICATIONS SECTION EMPORIUM, PENNSYLVANIA

SEPTEMBER, 1958

RATINGS

MAXIMUM RATINGS (Absolute Maximum Values)

Anode No. 3 Voltage	6600	Volts	dc
Anode No. 2 Voltage[2]	2860	Volts	dc
Ratio of Anode No. 3 Voltage to Anode No. 2 Voltage	2.3:1	Maximum	
Anode No. 1 Voltage	1100	Volts	dc
Grid No. 1 Voltage			
Negative Bias Value	220	Volts	dc
Positive Bias Value	0	Volts	dc
Positive Peak Value	2	Volts	
Peak Heater-Cathode Voltage			
Heater Negative with Respect to Cathode	140	Volts	dc
Heater Positive with Respect to Cathode	140	Volts	dc
Peak Voltage Between Anode No. 2 and Any Deflection Plate	550	Volts	

TYPICAL OPERATING CONDITIONS

Anode No. 3 Voltage[3]	3000	Volts	dc
Anode No. 2 Voltage[4]	1500	Volts	dc
Anode No. 1 Voltage for Focus	300 to 515	Volts	dc
Grid No. 1 Voltage Required for Cutoff[5]	−39 to −65	Volts	dc
Deflection Factor[6]			
Deflecting Plates 1-2[7]	40 to 54	Volts	dc/Inch
Deflecting Plates 3-4[8]	27 to 36	Volts	dc/Inch

CIRCUIT VALUES

Grid No. 1 Circuit Resistance	1.5	Megohms Max.
Deflection Circuit Resistance[9]	5	Megohms Max.

NOTES:

1. *Deflecting Plate 1 is Pin No. 11*
   Deflecting Plate 2 is Pin No. 10
   Deflecting Plate 3 is Pin No. 7
   Deflecting Plate 4 is Pin No. 8
   With D1 positive with respect to D2, the spot is deflected toward Pin No. 5
   With D3 positive with respect to D4, the spot is deflected toward Pin No. 2
2. *The product of the Anode No. 2 Voltage and the Average Anode No. 2 Current should be limited to 6 Watts.*
3. *It is recommended that the Anode No. 3 voltage be not less than 3000 Volts for high-speed scanning.*
4. *In general Anode No. 2 voltage should not be operated at less than 1500 Volts.*
5. *Visual extinction of undeflected focused spot.*
6. *The deflecting electrodes D3 and D4 are designed to have extra-high deflection sensitivity and consequently produce less than full-screen deflection. With post deflection acceleration, the length of deflection may be limited to 4 inches; without post-deflection acceleration, deflection to full screen diameter will ordinarily be obtained. These electrodes are, therefore, more suitable for the signal voltage than for the time base voltage.*
7. *Deflecting Plates 1-2 are nearer the screen.*
8. *Deflecting Plates 3-4 are nearer the base.*
9. *It is recommended that the deflecting electrode resistances be approximately equal.*

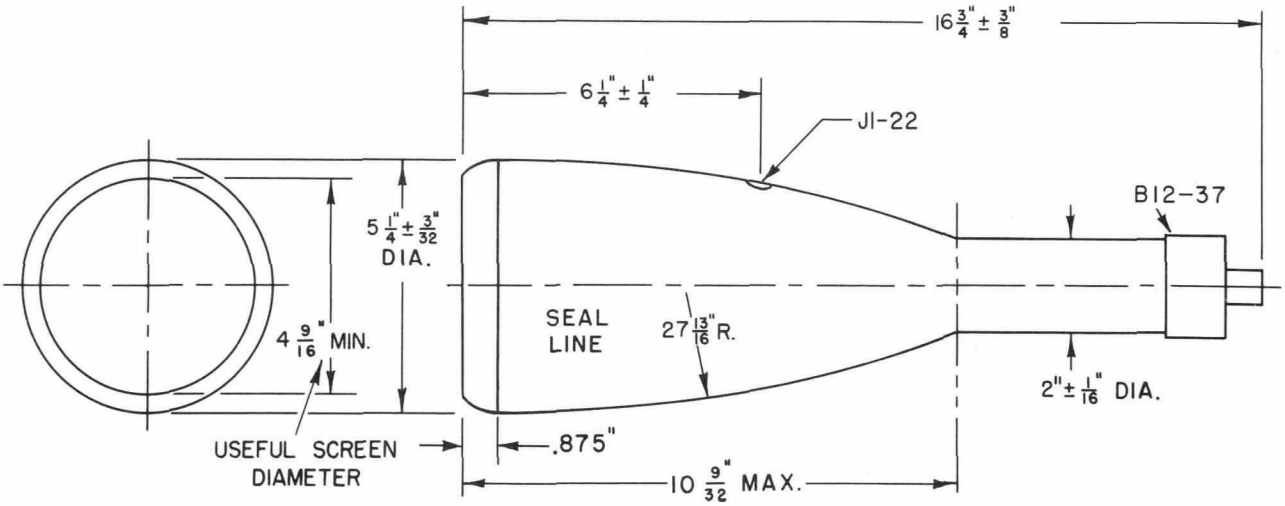
16 3/4" ± 3/8"
6 1/4" ± 1/4"
J1-22
B12-37
5 1/4" ± 3/32"
DIA.
SEAL
LINE
27 13/16" R.
4 9/16" MIN.
2" ± 1/16" DIA.
USEFUL SCREEN
DIAMETER
.875"
10 9/32" MAX.

S53005A