Carrier Pentode

4310A

CATHODE.

Indirectly heated oxide-coated

Voltage	10	V
Nominal current	0.32	A

RATING.

Mutual conductance	Measured at $V_a = V_{g_2} = 135$	2.0	mA/V
Screen grid μ	V_{g_3} 0, V_{g_1}—3	19	

INTER-ELECTRODE CAPACITIES.

Grid to anode	0.03	pF
Input	6	pF
Output	14	pF

DIMENSIONS.

Maximum overall length	130	mm.
Maximum bulb diameter	40	mm.
Base—Small American six pin		
Net weight	50	g.

MAXIMUM RATINGS.

Maximum direct anode voltage	250	V
Maximum direct screen voltage	180	V
Maximum direct cathode current	10	mA
Maximum direct screen current	2.5	mA

Tentative data
July 1946

Carrier Pentode

4310A

TYPICAL OPERATING CONDITIONS

Anode Voltage	Screen Gr. Voltage	Control Grid Bias	Suppressor Grid Volt	Anode Current	Load resistance	Input Voltage	Output Voltage	Output Power	Second Harmonic	Third Harmonic
Volts	Volts	Volts	Volts	Milliamperes	Ohms	Peak Volts	Peak Volts	Milliwatts	db	db
135	135	—3	0	5.4	20,000	3.00	—	250	22	30
					60,000	1.60	—	130	26	28
					60,000	0.95	—	60	35	45
					60,000	1.15	100	—	33	39
					100,000	0.57	75		35	50
					100,000	0.40	50	—	40	55
100	135	—3	0	5.4	40,000	2.70	—	340	26	28
					100,000	1.50	175	—	26	30
225	135	—3	0	5.5	60,000	2.70	—	425	27	27
					100,000	1.80	220	—	27	31
250	135	—3	0	5.5	60,000	2.70	—	480	26	30
					60,000	1.20	—	110	30	55
					100,000	2.10	250	—	26	29
					100,000	1.50	200	—	30	43

Carrier Pentode

4310A

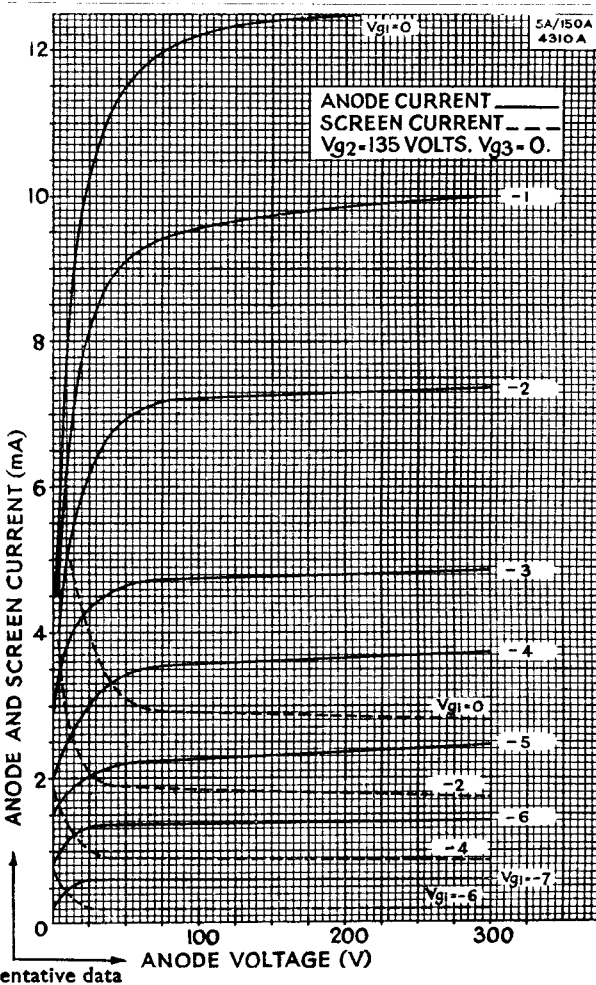

Tentative data
July 1946

Carrier Pentode

4310A

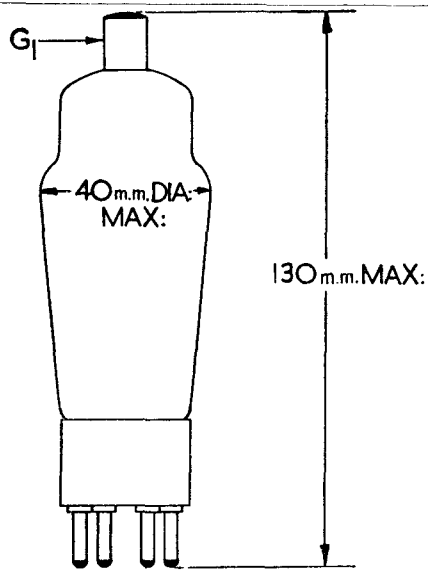

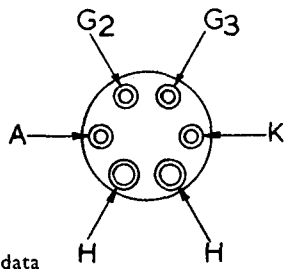

Tentative data
July 1946