from RTMA release #910,
Oct. 10, 1950

TECHNICAL INFORMATION
VELOCITY VARIATION OSCILLATOR

The type 5650 5981 is a velocity variation oscillator of the single cavity (integral) reflex type, designed for operation in the frequency range of 1,245 to 1,460 megacycles with an average power output of 100 milliwatts. The mechanical tuning mechanism provides a simple method of making wide frequency adjustments. In addition, the 5650/5981 can be electrically tuned to give a 4 megacycle vernier adjustment. The 5650 5981 is designed for operation at any frequency within the specified range, and is particularly suited for local oscillator service in microwave receivers. It is useful, also, as a local oscillator in microwave spectrum analyzers, as a pulse generator for testing circuit response, and as a microwave source for test purposes.

GENERAL CHARACTERISTICS

Heater, for oxide coated unipotential cathode:	
Voltage. (AC or DC)	6.3 ±.5 Volts
Current	0.455 Amperes
Frequency Range	1,245 to 1,460 Mc.

MAXIMUM RATINGS, Absolute Values

DC Resonator Voltage	250 Volts
DC Resonator Current	50 Ma.
DC Reflector Voltage	
Min. Negative Value	–30 Volts
Max. Negative Value	-220 Volts
Heater-Cathode Voltage	
Heater negative with respect to cathode	–50 Max. Volts
Heater positive with respect to cathode	–50 Max. Volts
Ambient temperature of air around shell	110 Max. °C
Temperature of coaxial output line	75 Max. °C

TYPICAL OPERATING CONDITIONS: C.W Oscillator: Frequency 1390 Mc.

DC Resonator Voltage	225 Volts
DC Resonator Current	35 Ma.
DC Reflector Voltage range*	–85 to –150 Volts
DC Reflector Current	Less than 7 Ma.
Electronic Tuning (Half Power)**	
Frequency change	5 Mc.
Power Output	134 MW
Thermal Compensation	±.05 Mc./°C

* Adjusted for maximum output at 1390 Mc.

** Change in frequency between the two ½ power points when the reflector voltage is varied above and below the point of maximum power output corresponding to the given frequency.

MECHANICAL

Mounting	Any Position
Overall dimensions	See outline drawing
Resonator Cavity	Integral part of tube
Envelope	Metal

TECHNICAL INFORMATION
VELOCITY VARIATION OSCILLATOR

Cap	Miniature
Base	To fit standard octal with No. 4 pin enlarged and tapped to admit transducer.

INSTALLATION

The 5650/5981 requires a standard octal socket modified with No. 4 pin enlarged and tapped to admit the coaxial transducer. The tube may be mounted in any position but should be rigidly clamped to insure proper contact of tube with the transducer, and to guard against excessive strains on the coaxial output line. The tube must be clamped on or below the shoulder of the header skirt.

The coaxial output line is coupled into a type "N" connector through a wide band transducer unit. (See outline drawing for transducer) All the tabulated data contained in this data sheet has been taken using this transducer operating into a matched load.

It is important that this transducer or its electrical equivalent be used to insure tube interchange ability and satisfactory tuning range characteristics. The standing wave ratio at the transducer should not exceed a VSWR of 1.1.

SHIELDING

Where the 5650/5981 is to be operated in the presence of strong magnetic fields, shielding of the resonator and reflector voltage leads is usually required in order to avoid undesirable modulation of the tube output. In extremely troublesome conditions, it may be advisable to place the 5650/5981 in a metal chamber with polyiron chokes provided to bring the voltages into the chamber. Adequate ventilation must be provided.

CATHODE

In most applications, the metal envelope (resonator) of the 5650/5981 is operated at ground potential. The cathode circuit is therefore negative with respect to ground by the amount of the resonator potential and must not be grounded. The cathode may be connected to one side of the heater or to the center tap of the heater transformer secondary. When cathode and heater are connected together, connections to the cathode should be made directly to the cathode contacts on the tube socket and never to the heater lead. When cathode and heater are not connected together, the heater-cathode voltage should not exceed ± 50 volts.

In all cases where the resonator is operated at ground potential, the heater transformer must be insulated to withstand the maximum resonator voltage.

In applications where the metal envelope (resonator) of the 5650/5981 is not at ground potential, it is essential that the tube be surrounded by a grounding shield, and be mechanically tuned with an insulated tool. Adequate ventilation must be provided through this shield to keep the ambient temperature of the chamber below the maximum specified value.

REFLECTOR

The reflector electrode is connected to pin No. 5, on the base of the tube. The power supply furnishing the reflector potential must be insulated to withstand the total resonator and reflector voltage. The reflector must never be allowed to become positive with respect to the cathode. If this precaution is not observed, damage to the reflector may result. In cases where modulating potentials bring the reflector voltage close to zero volts, or where extremely high reflector circuit impedances are required, a diode should be connected between cathode and reflector to prevent the reflector from going positive.

TECHNICAL INFORMATION
VELOCITY VARIATION OSCILLATOR

THE FOLLOWING DATA IS REPRESENTATIVE OF AVERAGE TUBES

TUBES DESIGNED FOR USE IN MODE A

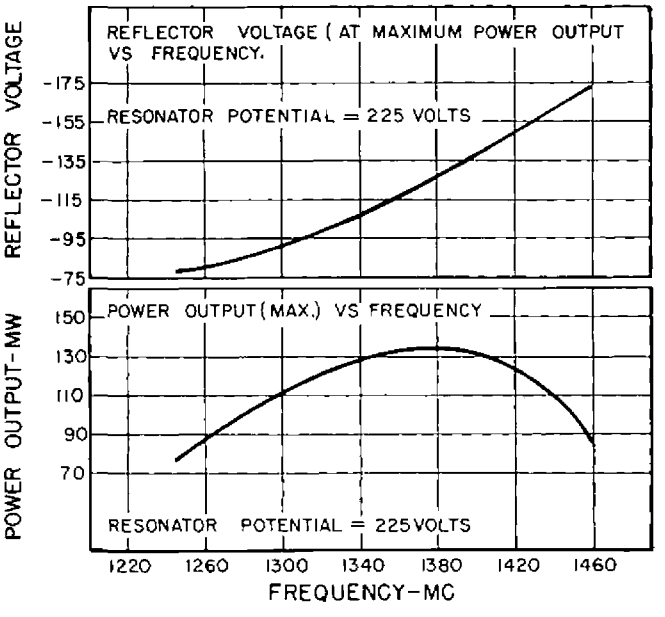

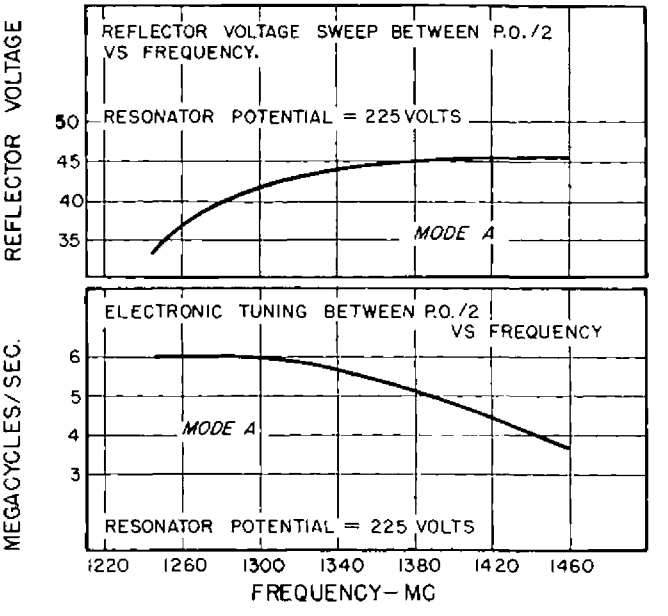

THE EXACT VALUE OF REFLECTOR VOLTAGE, PRODUCING MAXIMUM OUTPUT AT A CERTAIN FREQUENCY, VARIES FROM TUBE TO TUBE. THE VOLTAGE FOR ALL TUBES, AT EACH MODE, WILL FALL WITHIN THE SHADED AREA INDICATED BELOW.

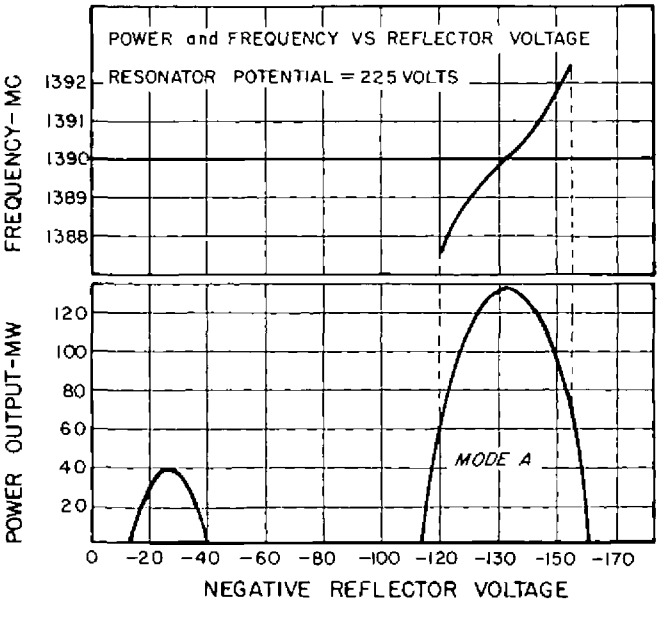

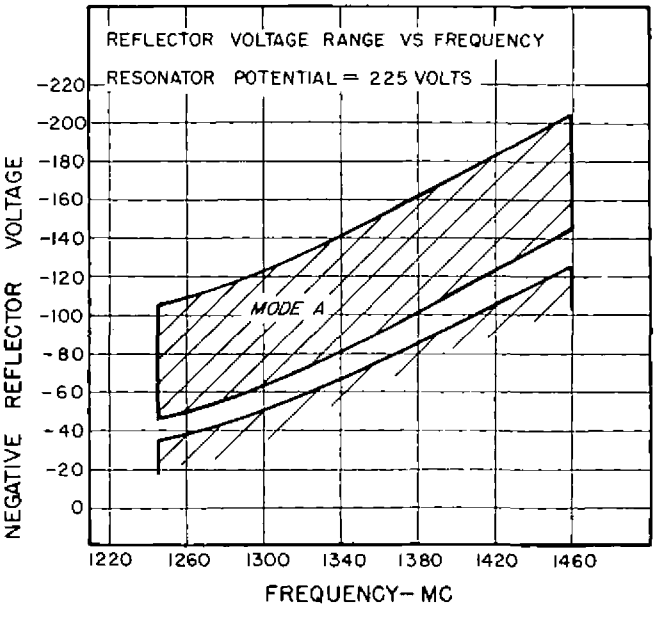

TECHNICAL INFORMATION
VELOCITY VARIATION OSCILLATOR

5650/5981 TRANSDUCER COUPLING

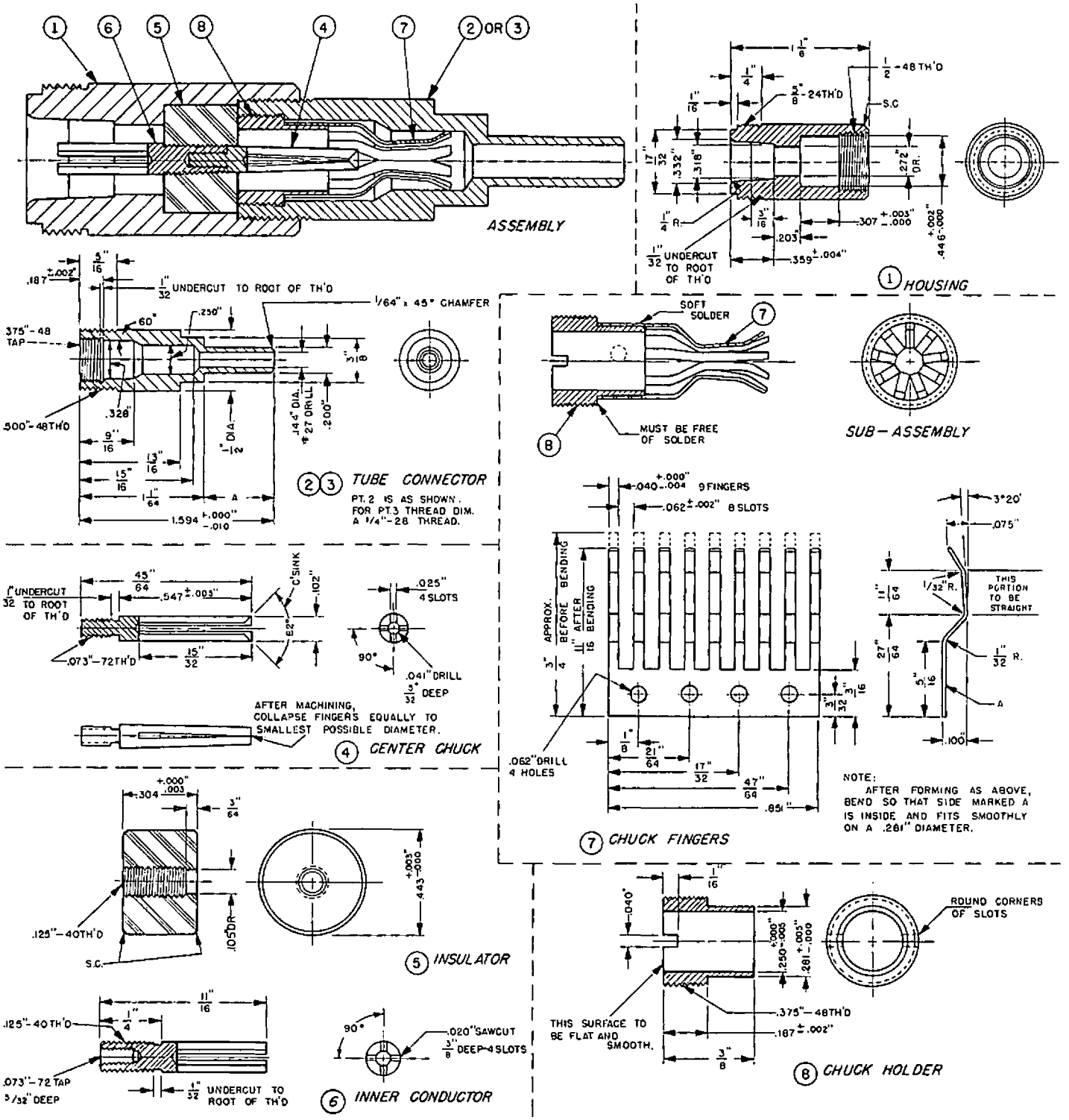

TECHNICAL INFORMATION
VELOCITY VARIATION OSCILLATOR

MECHANICAL TUNING MECHANISM

The mechanical tuning mechanism of the 5650 5981 is designed to permit occasional frequency adjustments. Rotating the tuning screw in a clockwise direction increases the frequency. Approximately three revolutions of the tuning nut are required to cover the recommended frequency range of the tube.

When the tube is first put into service, it should be mechanically tuned to the desired frequency. The tuning nut should then be flexed several times to relax the strains in the tuning mechanism. In this process the tuning nut should be adjusted to overshoot the desired frequency several times, each time decreasing the amount of tuning nut movement.

ELECTRONIC TUNING

With the mechanical tuning mechanism set near the desired frequency, vernier adjustment of the frequency may be accomplished by varying the reflector voltage. Maximum power output for a fixed mechanical tuner position, however, will be obtained at only one reflector value. If the mechanical tuning mechanism and the reflector voltage are mutually adjusted for a maximum power output at a given frequency, and if the reflector voltage is then varied above and below the value for maximum power output such that the power output is reduced to one half, the frequency change between the half-power values is defined as electronic tuning range. The amount of electronic tuning and the linearity of its variation with reflector voltage is dependent upon the type of load used, and the coupling to the load. When maximum electronic tuning range is required, it is recommended that the transducer be operated into a resistive load. A highly reactive load will shorten the electronic tuning range, and cause non-linear variation of frequency with reflector voltage.

FREQUENCY STABILITY

To obtain the most stable operation from the 5650/5981 the reflector and resonator voltage supplies should be very well regulated. It is also essential that the 5650/5981 be operated at a near constant ambient temperature. Under no circumstances should the temperature exceed the maximum specified values.

The materials used in the mechanical tuning mechanism of the 5650 5981 have been selected in such a way that their thermal expansion coefficient will produce a

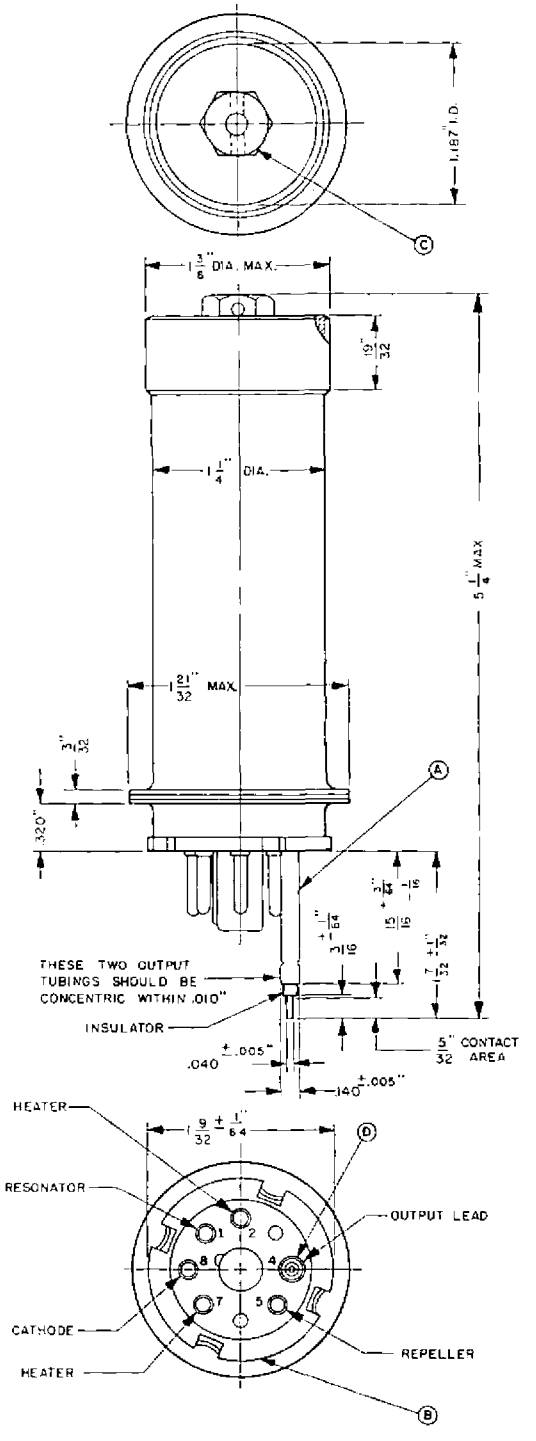

TECHNICAL INFORMATION
VELOCITY VARIATION OSCILLATOR

desirable ambient temperature vs. frequency coefficient. In order that this desirable temperature coefficient will not be interfered with, a tube should not be clamped above the header skirt.

MODES OF OPERATION

Oscillation may be obtained in a given tube with several combinations of resonator and reflector voltages at a particular frequency. The regions where oscillation occurs within the reflector voltage range are referred to as voltage modes. The curves show characteristics of the average 5650/5981 in the recommended mode. This mode has been chosen because it represents the best compromise between optimum power output and wide electronic tuning range.