DESCRIPTION:

THE 5957 IS A UNIPOTENTIAL CATHODE, THREE ELEMENT HYDROGEN FILLED THYRATRON DESIGNED FOR NETWORK DISCHARGE SERVICE. IN SUCH SERVICE, IT IS SUITABLE FOR PRODUCING PULSE OUTPUTS OF MORE THAN 350 KW AT AN AVERAGE POWER LEVEL OF MORE THAN 400 WATTS. ITS SIZE MAKES IT ESPECIALLY SUITABLE FOR COMPACT, AIRBORNE RADAR SYSTEMS.

THE SPECIAL FEATURES OF THE E-37B INCLUDE THE HIGH PEAK VOLTAGE AND CURRENT RATINGS, ITS VERY COMPACT SIZE AND AN INTERNAL HYDROGEN RESERVOIR CAPABLE OF MAINTAINING THE HYDROGEN PRESSURE THROUGHOUT THE USEFUL LIFE OF THE TUBE.

ELECTRICAL DATA, GENERAL:

	NOM.	MIN.	MAX.	
HEATER VOLTAGE	6.3	5.7	6.9	VOLTS A.C.
HEATER CURRENT (E_h=6.3 volts)		5.5	6.7	AMPERES
MINIMUM HEATING TIME			3	MINUTES

MECHANICAL DATA, GENERAL:

MOUNTING POSITION		ANY
BASE	A4-103	
ANODE CAP	SMALL METAL, C1-1	
COOLING (NOTE 1)		
NET WEIGHT	3-1/2	OUNCES
DIMENSIONS		SEE OUTLINE

RATINGS:

Max. Peak Anode Voltage, Forward (Note 2)	8.0	Kilovolts
Max. Peak Anode Voltage, Inverse (Note 3)	8.0	Kilovolts
Min. Anode Supply Voltage	2.5	Kilvolts d.c.
Max. Peak Anode Current	83	Amperes
Max. Average Anode Current	100	Milliamperes
Max. RMS Anode Current (Note 4)	2.9	Amperes a.c.
Max. EPY x IB x PRR	2.5×10^9	
Max. Anode Current Rate of Rise	1,200	Amperes/uSecond
Peak Trigger Voltage (Note 5)		
Max. Peak Inverse Trigger Voltage	200	Volts
Max. Anode Delay Time (Note 6)	0.50	Microsecond
Max. Anode Delay Time Drift	0.10	Microsecond
Max. Time Jitter (Note 7)	0.01	Microsecond (initial)
	0.02	µSecond (end of life)
Ambient Temperature	-50° to +90°	Cent.
Shock Rating	24°	Navy (Flyweight) Shock Machine

TYPICAL OPERATION AS PULSE MODULATOR, DC RESONANT CHARGING:

Peak Network Voltage	8.0	Kilovolts
Pulse Repetition Rate	4,500	Pulses/Second
Pulse Length	0.25	Microsecond
Pulse Forming Network Impedance	50.2	Ohms
Trigger Voltage	200	Volts
Peak Power Output (Resistive Load 92% Zn)	311	Kilowatts
Peak Anode Current	83	Amperes
Average Anode Current	0.094	Amperes d.c.

Note 1:

Cooling permitted. However, there shall be no air blast directly on the bulb.

Note 2:

For instantaneous starting application, where the plate voltage is applied instantaneously, the maximum permissible EPY is 7,000 volts.

Note 3:

The peak inverse voltage should not exceed 2.5 KV during the first 25 microseconds after the pulse.

NOTE 4:

THE ROOT MEAN SQUARE ANODE CURRENT SHALL BE COMPUTED AS THE SQUARE ROOT OF THE PRODUCT OF THE PEAK CURRENT AND THE AVERAGE CURRENT.

NOTE 5:

THE DRIVER PULSE, MEASURED AT THE TUBE SOCKET WITH THE THYRATRON GRID DISCONNECTED SHOULD HAVE THE FOLLOWING CHARACTERISTICS:

A.	VOLTAGE	175 VOLTS (MIN.)
B.	DURATION	2 MICROSECONDS (AT 70% POINTS)
C.	IMPEDANCE	1500 OHMS (MAX.)
D.	TIME OF RISE	0.5 MICROSECOND (MAX.)

THE LIMITS OF ANODE TIME DELAY AND ANODE TIME JITTER ARE BASED ON THE MINIMUM TRIGGER. USING THE HIGHEST PERMISSIBLE TRIGGER VOLTAGE AND LOWEST TRIGGER SOURCE IMPEDANCE MATERIALLY REDUCES THESE VALUES BELOW THE LIMITS SPECIFIED.

NOTE 6:

THE TIME OF ANODE DELAY IS MEASURED BETWEEN THE 26 PERCENT POINT ON THE RISING PORTION OF THE UNLOADED GRID VOLTAGE PULSE AND THE POINT AT WHICH EVIDENCE OF ANODE CONDUCTION FIRST APPEARS ON THE LOADED GRID PULSE.

NOTE 7:

TIME JITTER IS MEASURED AT THE 50 PERCENT POINT ON THE ANODE CURRENT PULSE.

ADDITIONAL INFORMATION FOR SPECIFIC APPLICATIONS CAN BE OBTAINED FROM THE

ELECTRON TUBE APPLICATIONS SECTION
ITT COMPONENTS DIVISION
POST OFFICE BOX 412
CLIFTON, NEW JERSEY

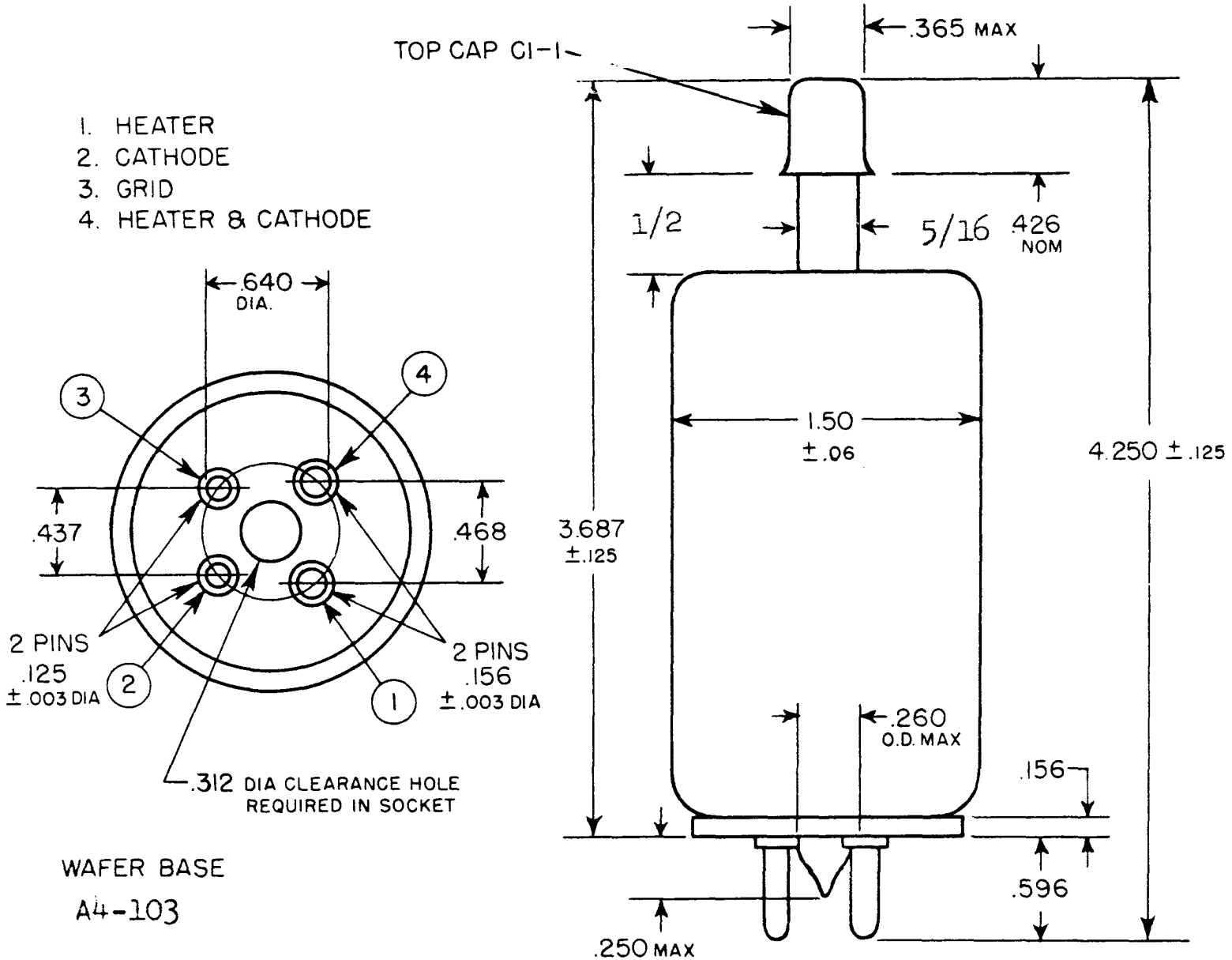

TYPE 5957 HYDROGEN THYRATRON