RTMA sponsor:
Westinghouse Electric Corp.

Release No. 926

October 30, 1950

ELECTRON TUBE TYPE 5891

The 5891 is a three-electrode tube designated for use as an oscillator, modulator, or amplifier. The anode is capable of dissipating 25 kilowatts during Continuous Commercial Service. Cooling is accomplished by forced air. The cathode is a thoriated tungsten filament which may be operated either three-phase wye or single-phase. Maximum ratings apply up to 10 megacycles.

GENERAL

Electrical Data:	Min:	Bogey:	Max:	
Filament Voltage (three-phase) line to neutral	10	11	11.6	Volts
*Filament Current per phase at Bogey Voltage	89	95	101	Amperes
Filament Voltage, (single-phase)	10	11	11.6	Volts
*Filament Current single-phase at Bogey Voltage	267	285	303	Amperes

*No limiting of filament starting current is necessary on either single or three-phase excitation.

Filament Heating Time	10	-	-	Seconds
Amplification Factor: $E_c = -200V$; $I_b = 1.0$ A.	-	36	-	
Peak Cathode Current, Note 1	-	-	50	Amperes
Direct Interelectrode Capacitances:				
Grid-Plate	32	40	48	uuf
Grid-Filament	64	80	96	uuf
Plate-Filament	3	6	9	uuf

NOTE 1: Represents maximum usable cathode current, (plate current plus grid current), for any condition of operation.

Mechanical Data:

Mounting Position	Vertical - Anode Down
Type of Cooling	Forced Air
Ratings based on maximum incoming air temperature of	45°C

Required Vertical Air Flow Through Radiator: (Note 2)			
Plate Dissipation - Per cent of Rating	100%	80%	60%
Required Air Flow cubic feet per minute	1800	1450	1100
Pressure, inches of water	2.2	1.5	0.85

Required Air Flow to Filament and Grid Seals (Note 2):	10 CFM	Min.
Maximum Bulb Temperature	180°C	
Maximum Seal Temperature	180°C	
Maximum Radiator Temperature	180°C	
Net Weight, approximate	130	Pounds

NOTE 2: Cooling air may be applied and removed simultaneously with all voltages.

AUDIO-FREQUENCY POWER AMPLIFIER AND MODULATOR - CLASS B

Maximum Ratings, Absolute Values	CCS	
D.C. Plate Voltage	15.0	KV Max.
Maximum Signal D.C. Plate Current f	6.0	Amps. Max.
Maximum Signal Plate Input f	90.0	KW Max.
Plate Dissipation f	25.0	KW Max.

f Averaged over any audio-frequency cycle of sine-wave form.

Typical Operation:
(Unless Other Specified, Values Are For Two Tubes)

	CCS		
D.C. Plate Voltage	10	15	KV
Peak A-F Grid-to-Grid Voltage	960	1540	Volts
D.C. Grid Voltage	-210	-340	Volts
Zero Signal D.C. Plate Current	0.5	0.5	Amps.
Maximum Signal D.C. Plate Current	6.4	10.0	Amps.
Effective Load Resistance Plate-to-Plate	3200	3560	Ohms
Maximum Signal Driving Power, Approximate	195	970	Watts
Maximum Signal Power Output, Approximate	35	100	KW

PLATE-MODULATED RADIO-FREQUENCY POWER AMPLIFIER - CLASS C TELEPHONY
(Carrier Conditions Per Tube For Use With A Maximum Modulation Factor of 1.0)

Maximum Ratings, Absolute Values	CCS	
D.C. Plate Voltage	12,500	Volts Max.
D.C. Grid Voltage	-2000	Volts Max.
D.C. Plate Current	5	Amps. Max.
D.C. Grid Current	1.0	Amps. Max.
Plate Input	62.5	KW Max.
Plate Dissipation	17	KW Max.

Typical Operation:	CCS	CCS	
D.C. Plate Voltage	10,000	12,500	Volts
Peak R-F Plate Voltage	9000	10,800	Volts
D.C. Grid Voltage	-800	-1500	Volts
Peak R-F Grid Voltage	1300	2090	Volts
D.C. Plate Current	3.4	4	Amps.
D.C. Grid Current, Approximate	0.74	0.77	Amps.
Driving Power, Approximate	915	1550	Watts
Power Output, Approximate	28	40	KW

RADIO-FREQUENCY POWER AMPLIFIER AND OSCILLATOR - CLASS C TELEGRAPHY
(Key-Down Conditions Per Tube Without Amplitude Modulation):

Maximum Ratings, Absolute Values	CCS	
D.C. Plate Voltage	15,000	Volts Max.
D.C. Grid Voltage	-2000	Volts Max.
D.C. Plate Current	8	Amps. Max.
D.C. Grid Current	1	Amp. Max.
Plate Input	100	KW Max.
Plate Dissipation	25	KW Max.

Typical Operation:	CCS		
D.C. Plate Voltage	12,500	15,000	Volts
Peak R-F Plate Voltage	10,500	12,400	Volts
D.C. Grid Voltage	-1250	-1500	Volts
Peak R-F Grid Voltage	1845	2220	Volts
D.C. Plate Current	5.2	6	Amps.
D.C. GridCurrent, Approximate	0.95	1	Amps.
Driving Power, Approximate *	1700	2160	Watts
Power Output, Approximate *	50	70	KW

With essentially sine wave excitation.

RATINGS VS. FREQUENCY

Maximum ratings apply up to 10 megacycles. The tube may be operated at higher frequencies provided the maximum values of the plate voltage and power input are reduced according to the tabulation below (other maximum ratings are the same as shown above). Special attention should be given to adequate ventilation of the bulb at these frequencies.

Frequency	10	18	25	Mcs.
Percentage of Maximum Rated Plate Voltage and Plate Input:				
Class C Telegraphy	100	88	80	%
Class C Plate Telephony	100	88	80	%

CHARACTERISTIC RANGE VALUES FOR EQUIPMENT DESIGN

Characteristic:	Conditions:		Limits: Min:	Bogey:	Max:	
Grid Voltage:	E_f=11Vac; E_b=2.6KV; i_b=35A.	e_c:	-	-	900	Volts
Grid Current:	E_f=11Vac; E_b=2.6KV; i_b=35A.	i_c:	-	-	10	Amps.
Plate Voltage:	E_f=11Vac; E_c=0; I_b=1.0Adc	E_b:	2.6	3.3	4.0	KVdc
Plate Voltage:	E_f=11Vac; E_c= -200Vdc; I_b=1.0Adc	E_b:	9.7	11.3	12.9	KVdc
Grid Voltage:	E_b=10KVdc; I_b=0.020Adc	E_c:	-180	-250	-320	Vdc
Plate Power Output:	Class C Telegraphy E_f=11Vac; E_b=15KV I_b= 6Adc; E_c= -1500 Vdc	P_o:	65	-	-	KW

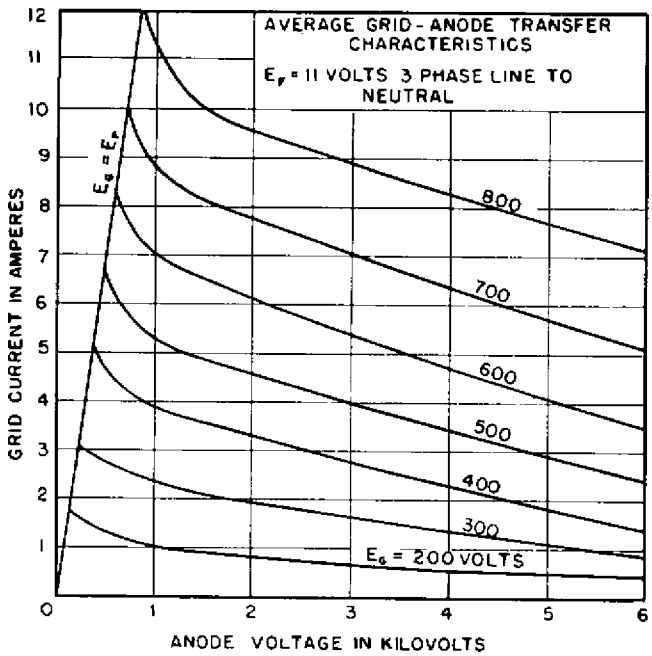
AVERAGE GRID-ANODE TRANSFER CHARACTERISTICS
E_f = 11 VOLTS 3 PHASE LINE TO NEUTRAL
$E_G = E_f$
800
700
600
500
400
300
E_G = 200 VOLTS
GRID CURRENT IN AMPERES
ANODE VOLTAGE IN KILOVOLTS

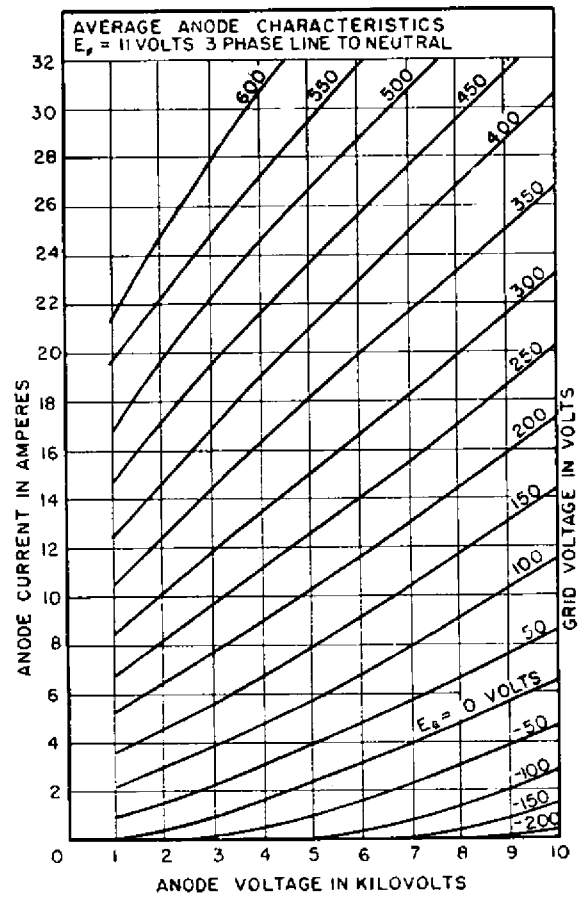
AVERAGE ANODE CHARACTERISTICS
E_f = 11 VOLTS 3 PHASE LINE TO NEUTRAL
600
550
500
450
400
350
300
250
200
150
100
50
E_G = 0 VOLTS
-50
-100
-150
-200
ANODE CURRENT IN AMPERES
GRID VOLTAGE IN VOLTS
ANODE VOLTAGE IN KILOVOLTS

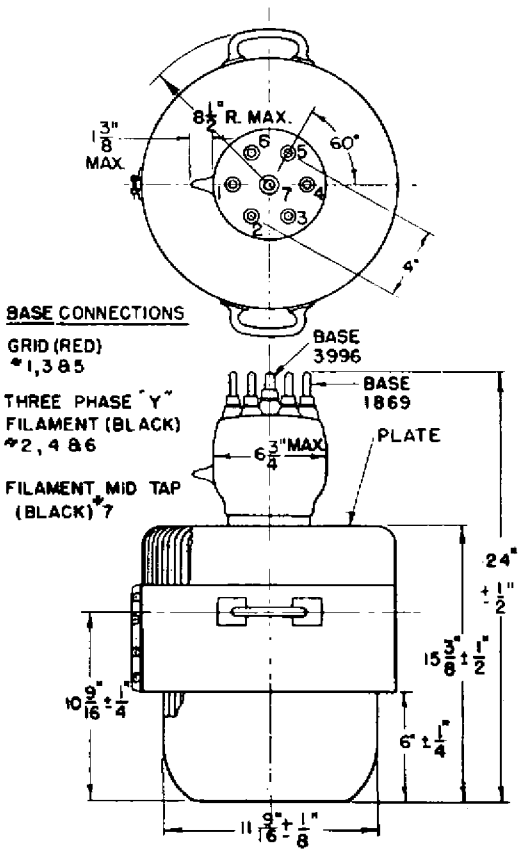
8½" R. MAX.
1 3/8" MAX.
60°
4"
BASE CONNECTIONS
GRID (RED) #1,3 & 5
THREE PHASE "Y" FILAMENT (BLACK) #2,4 & 6
FILAMENT MID TAP (BLACK) #7
BASE 3996
BASE 1869
PLATE
6 3/4" MAX.
24" ± 1/2"
15 3/8" ± 1/2"
10 9/16" ± 1/4"
6" ± 1/4"
11 9/16" ± 1/8"

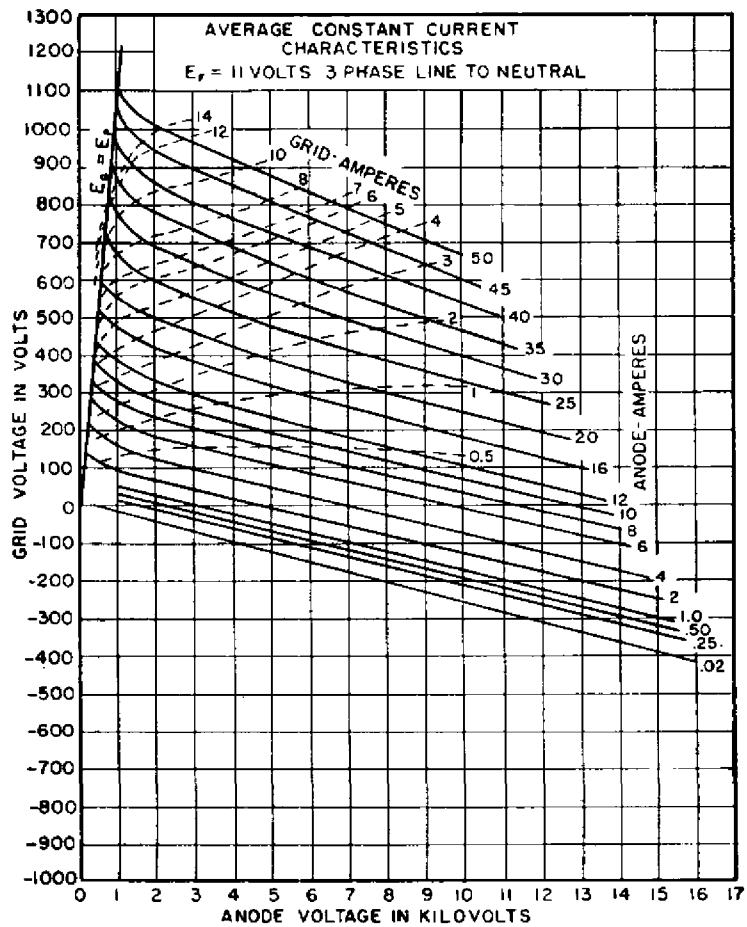
AVERAGE CONSTANT CURRENT CHARACTERISTICS
E_f = 11 VOLTS 3 PHASE LINE TO NEUTRAL
$E_G = E_f$
GRID-AMPERES
ANODE-AMPERES
GRID VOLTAGE IN VOLTS
ANODE VOLTAGE IN KILOVOLTS