## MECHANICAL DATA

| | |
|---|---|
| Base | A4-76, Peewee 4 Pin |
| Cap | C1-3, Skirted Miniature |
| Cooling | Convection and Conduction. Contact rings are to make direct peripheral contact with metallic parts of the external cavity. |
| Mounting Position | Any |

Connections:

| | |
|---|---|
| Pin 1 — Control Electrode | Lower Contact Ring — 1st Resonator |
| Pin 2 — Heater | Upper Contact Ring — 2nd Resonator |
| Pin 3 — Cathode | Cap — Reflector |
| Pin 4 — Heater | |

## ELECTRICAL DATA

### HEATER CHARACTERISTICS

| | |
|---|---|
| Heater Voltage, AC or DC (±8%) | 6.3 Volts |
| Heater Current | 750 Ma |

### RATINGS (Absolute Values)

| | | |
|---|---|---|
| Resonator Voltage | 350 Volts | dc Max. |
| Resonator Current | 35 Ma | dc Max. |
| Reflector Voltage | −700 Volts | dc Max. |
| | −15 Volts | dc Min. |
| Control Electrode Voltage | +20 to −150 Volts | dc Max. |
| Control Electrode Current | 12 Ma | Max. |
| Heater Cathode Voltage | ±45 Volts | dc Max. |
| Power Input | 12 Watts | Max. |
| Seal Temperature | 175°C | Max. |

### GENERAL

| | | | | |
|---|---|---|---|---|
| Reflector Mode | 1-3/4 | 2-3/4 | 3-3/4 | |
| Frequency | 4000 | 4500 | 6500 | Mc |
| | 1600 | 2100 | 3600 | Mc |

### TYPICAL OPERATION

**CW Oscillator**

| | | | | |
|---|---|---|---|---|
| Reflector Mode | 1-3/4 | 2-3/4 | 3-3/4 | |
| Cavity Mode | 3/4 | 3/4 | 5/4 | |
| Frequency | 2800 | 3200 | 5000 | Mc |
| Resonator Voltage | 325 | 325 | 325 | Volts |
| Cathode Current | 28 | 26 | 25 | Ma |
| Reflector Voltage (approx.) | −220 | −120 | −220 | Volts |
| Control Electrode Voltage (Full Power Output) | +10 | +10 | +10 | Volts |
| Power Output Cutoff Voltage | +3 | +3 | +3 | Volts |
| Electronic Tuning Range (Between Half Power Points) | 6 | 6 | 6 | |

**Pulse Modulated Oscillator**

For pulse operation, the general conditions are the same except as shown below. The peak power output with the tube modulated by the control electrode is not more than 1.5 db below the cw output within the rated frequency range.

| | |
|---|---|
| Control Electrode Voltage | −10 Volts |
| Pulse Modulation Voltage | +20 Volts |
| Pulse Repetition Rate | 40-4000 PPS |
| Minimum Pulse Duration | 0.5 μsec. |
| Rise Time | 0.1 μsec. |
| Decay Time | 0.1 μsec. |
| Jitter | 0.15 μsec. |

## QUICK REFERENCE DATA

The Sylvania Type 5836 is a broadband reflex klystron designed for service as a CW or pulse modulated oscillator in conjunction with external cavity resonators. The 5836 operates over the range from 1600 to 6500 Mc.

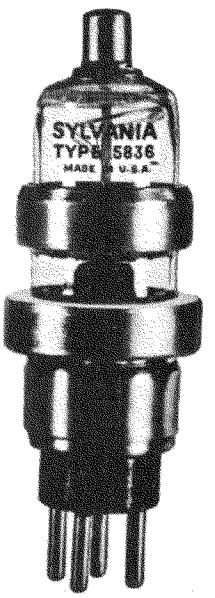


SYLVANIA ELECTRIC PRODUCTS INC.

ELECTRONICS DIVISION
WOBURN, MASS.

*Prepared and Released By The TECHNICAL PUBLICATIONS SECTION EMPORIUM, PENNSYLVANIA*

5-54-86

## APPLICATION DATA

The Sylvania Type 5836 is a broadband reflex klystron designed for cw or pulsed operation in conjunction with external cavity resonators. This tube operates over the range from 1600 to 6500 Mc in three modes. The 5836 is particularly adapted for use in signal generators, spectrum analyzers, or local oscillator applications where broadband frequency coverage is needed.

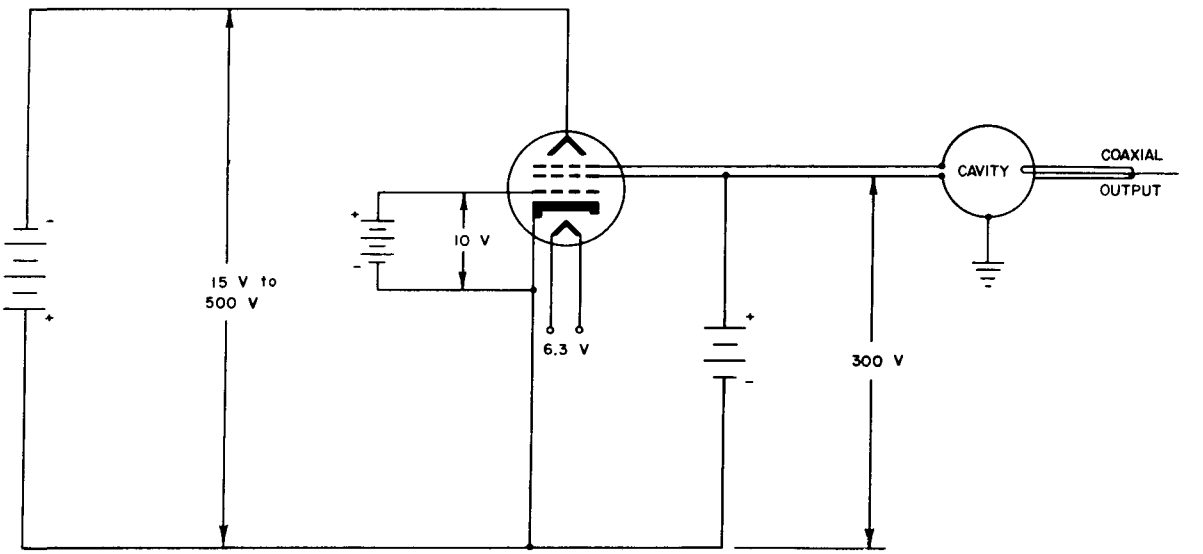


FIG. 1 — CW OSCILLATOR CIRCUIT EMPLOYING THE 5836 REFLEX KLYSTRON

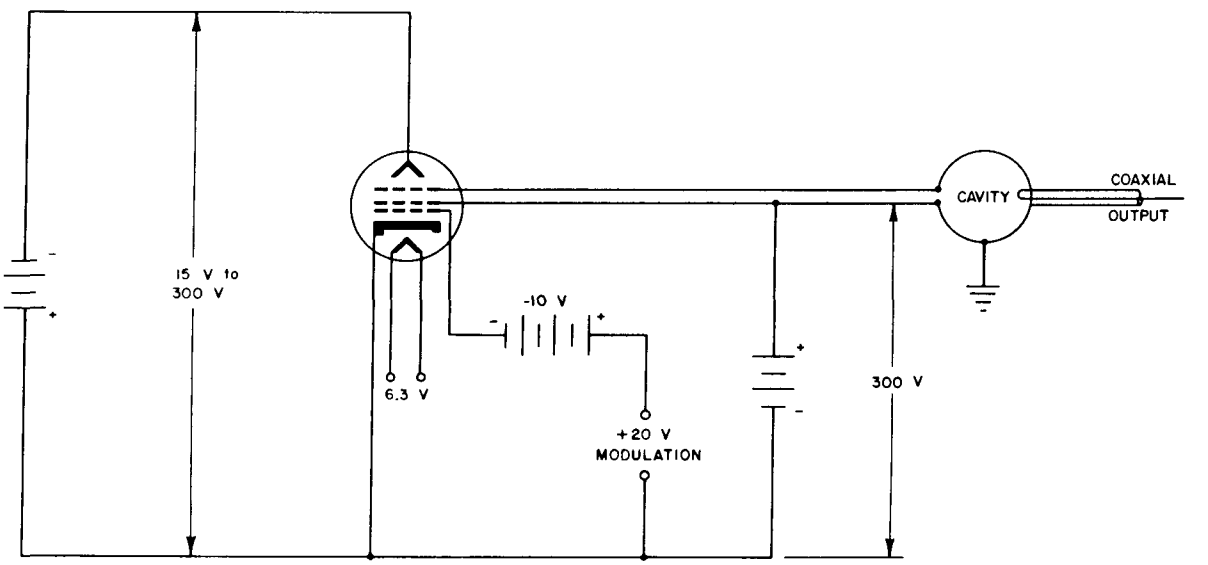


FIG. 2 — PULSE MODULATED OSCILLATOR CIRCUIT EMPLOYING THE 5836 REFLEX KLYSTRON

## APPLICATION DATA

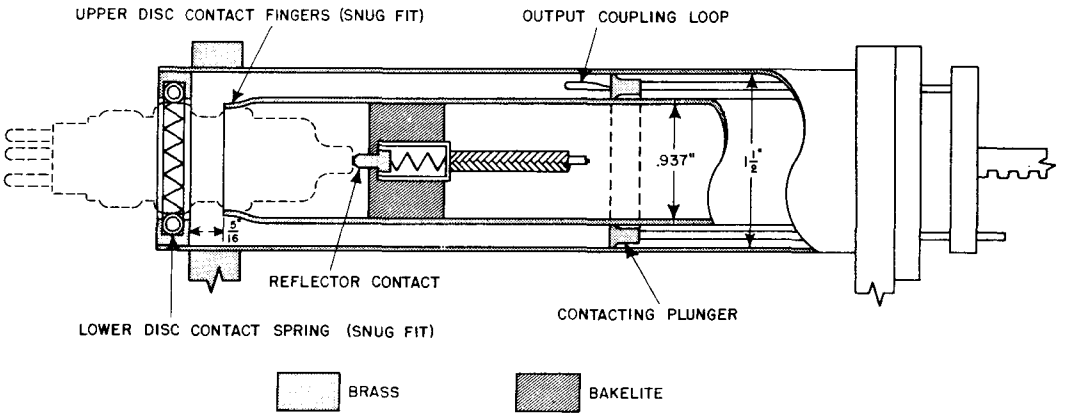


| | | | |
|---|---|---|---|
| Recess in Contact Plunger | 1/2" | Loop Size for 3000-5000 mc | 9/32" |
| Loop Size for 800-3500 mc | 9/16" | Loop Width for Both Ranges | .175" |

The length is determined by the frequency of operation and the range of plunger motion is set by the frequency band to be covered.

FIG. 3 — DIAGRAM OF A TYPICAL COAXIAL CAVITY FOR USE WITH THE 5836 REFLEX KLYSTRON

## AVERAGE CHARACTERISTICS

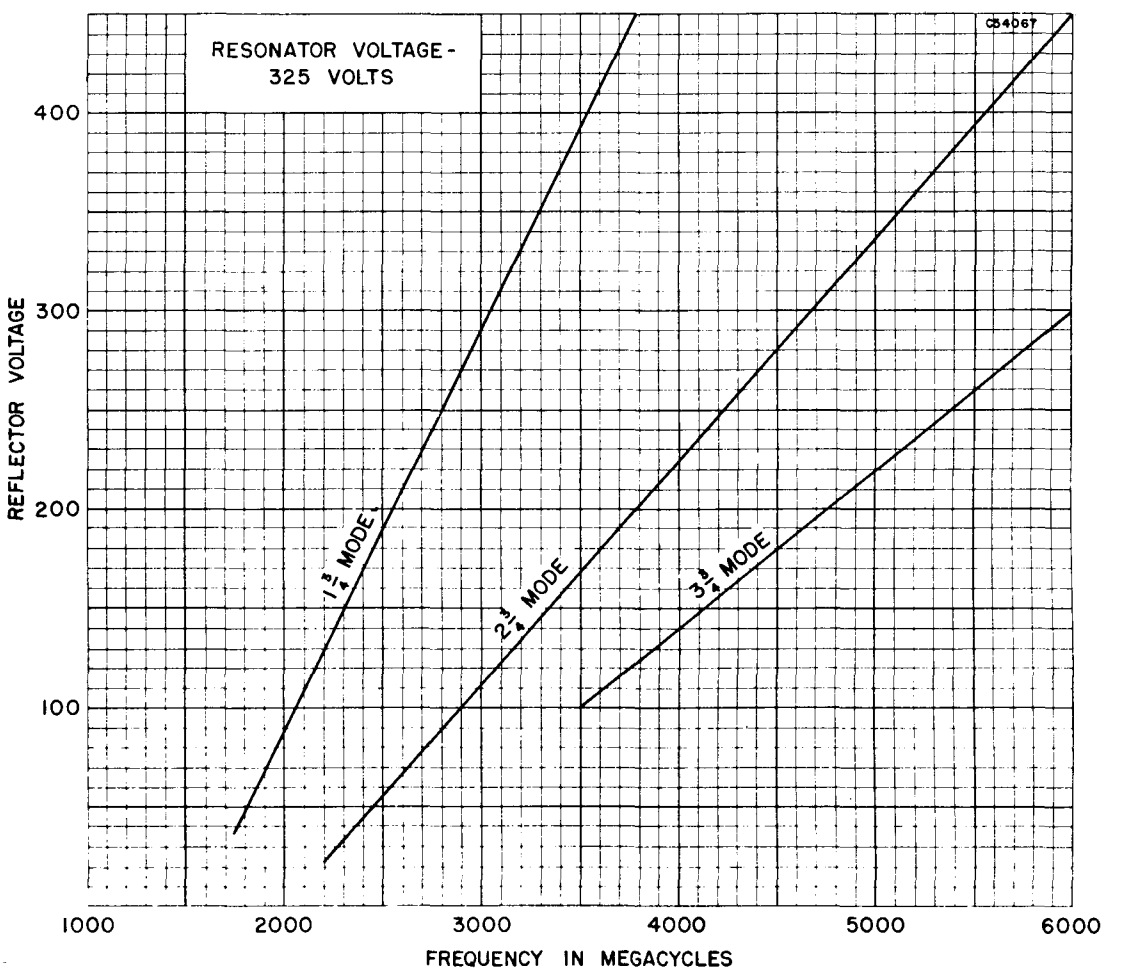

AVERAGE CHARACTERISTICS

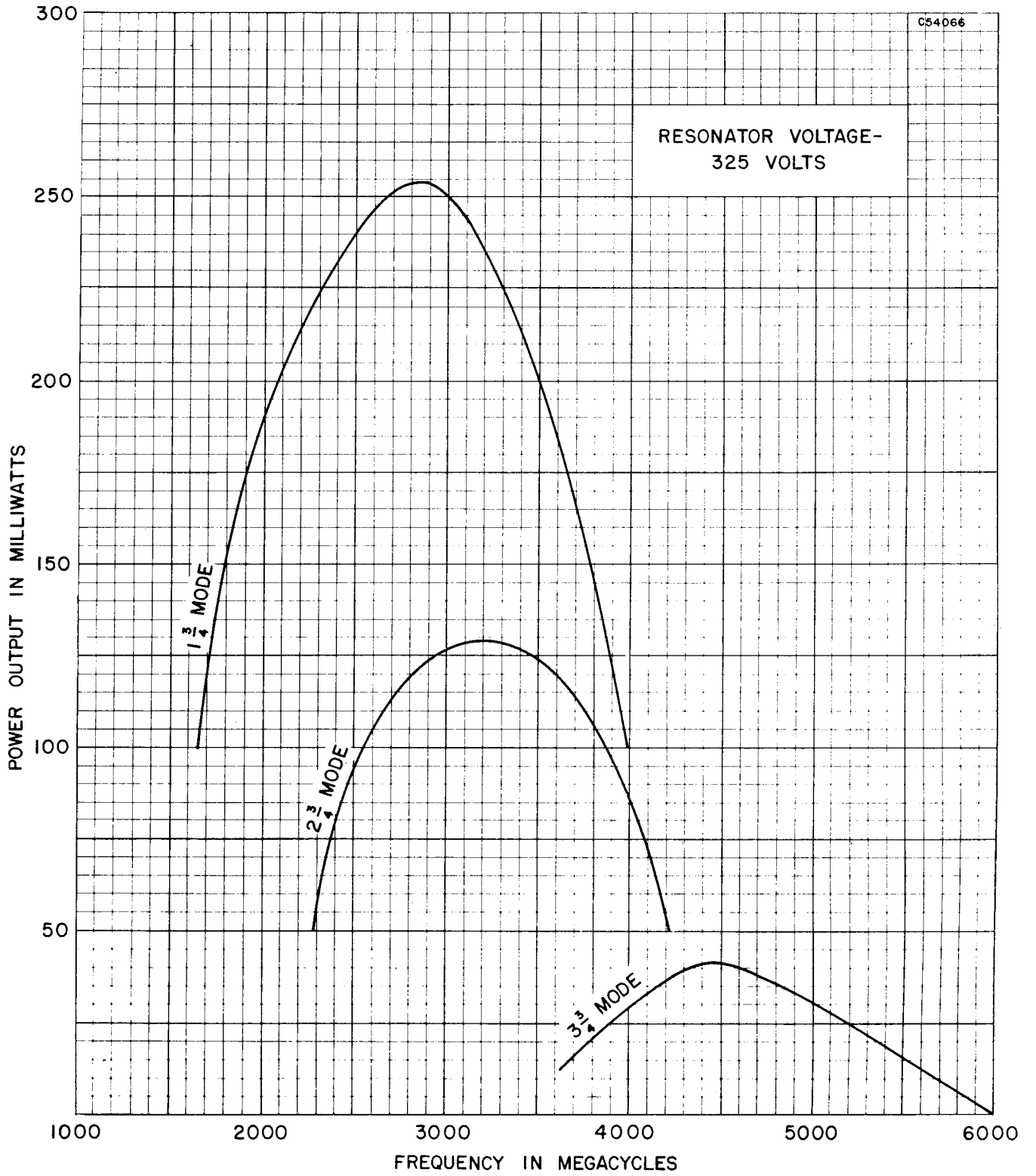
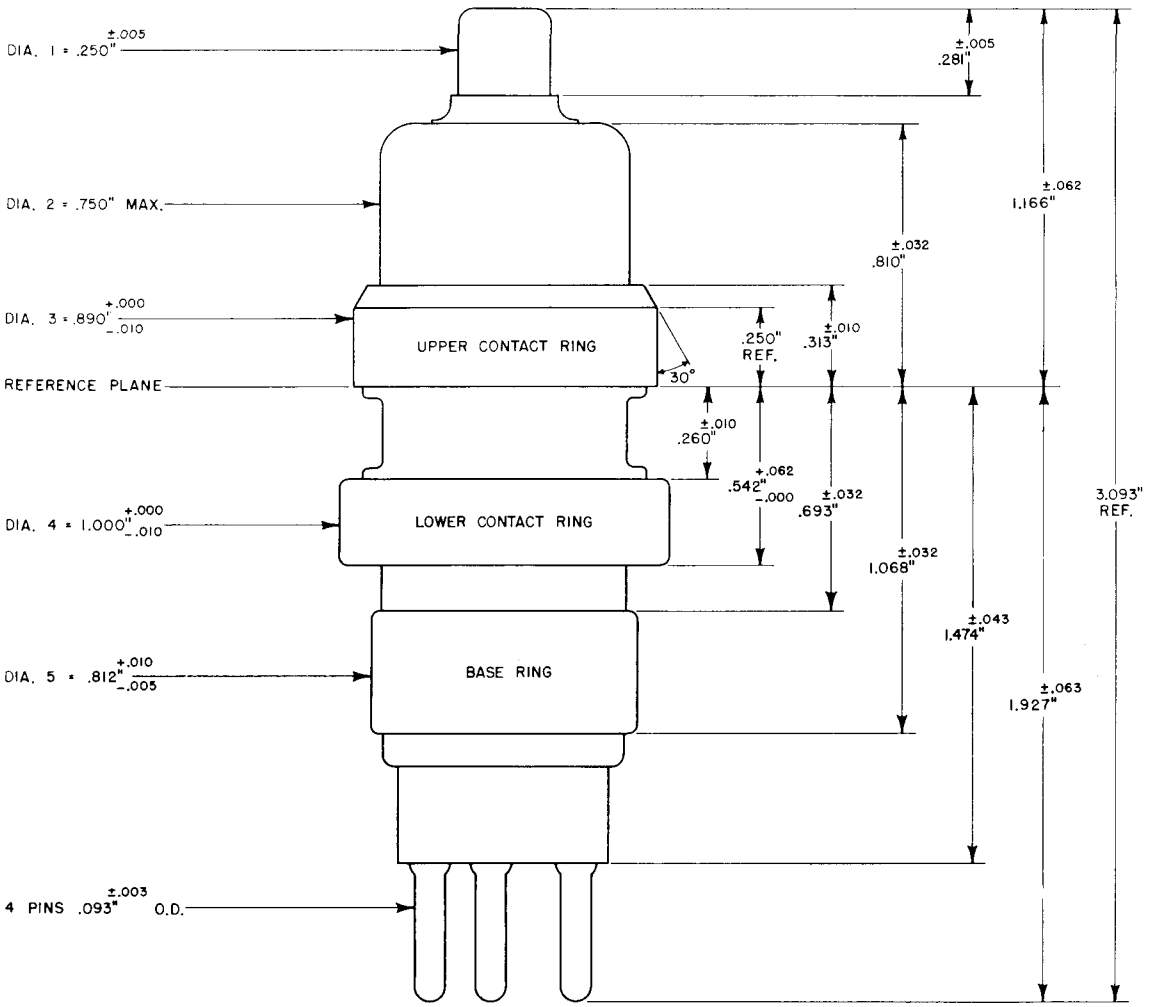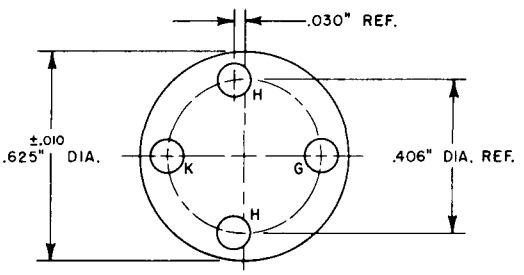
# OUTLINE DRAWING