SYLVANIA

engineering data service

5790

MECHANICAL DATA

Mounting Position: . . . . . Any
Between rf choke flanges in 0.360 x 0.220 O.D. 0.040 WT waveguide.

Ambient Temperature Range: . . . . . −40 to +100° C
(non-operating)

Frequency Change: . . . . . $\Delta fo = \pm 50$ Mc Max.
with Temperature (0 to 100°C at 34,860 Mc)

Dimensions: . . . . . See Outline

ELECTRICAL DATA

IGNITOR CHARACTERISTICS

Ignitor Open Circuit Voltage . . . . . −750 to −1000 Vdc
Ignitor Current . . . . . 200 μ Adc Max.
Ignitor Voltage Drop at 100 μa . . . . . 200 to 350 Vdc

LOW POWER LEVEL UNFIRED CHARACTERISTICS

Insertion Loss . . . . . 2.0 db Max.
Ignitor Interaction at 100 μa . . . . . 0.2 db Max.

HIGH POWER LEVEL FIRED CHARACTERISTICS

Leakage Power[1] . . . . . 30 Mw Max.
Recovery Time[1] . . . . . 4 μs Max.
at −3 db

NOTE:

1. *po = 8 kw; f = 34,860 mc; I_z = 100 μAdc;*
   prr = 2000 pps; tp = 0.25 μs or
   prr = 1000 pps; tp = 0.5 μs

APPLICATION DATA

Sylvania Type 5790 is a High-Q, tunable transmit-receiver tube used in high definition radar where fine resolution is the prime requisite. The specific function of this tube is to isolate the sensitive receiver from the magnetron during the transmitted pulse. The TR tube recovers within 4 microseconds using a −3 db reference level, affording minimum loss of received signal. The 5790 has an integral cavity and operates over the range between 33,815 mc and 35,905 mc.

QUICK REFERENCE DATA

The Sylvania Type 5790 is an integral cavity tunable tube designed to operate between 33,815 mc and 35,905 mc. In duplexing systems Type 5791 may be used as the companion ATR.

The information in this EDS is furnished without assumption of responsibility on the part of Sylvania Electric Products, Inc. for its use or interpretation or for any infringement of patent or other rights of third parties resulting from such use or interpretation.

SYLVANIA ELECTRIC PRODUCTS INC.
SPECIAL TUBE OPERATIONS
WOBURN, MASS.

Prepared and Released By The
TECHNICAL PUBLICATIONS SECTION
EMPORIUM, PENNSYLVANIA
APRIL, 1957

OUTLINE DRAWING

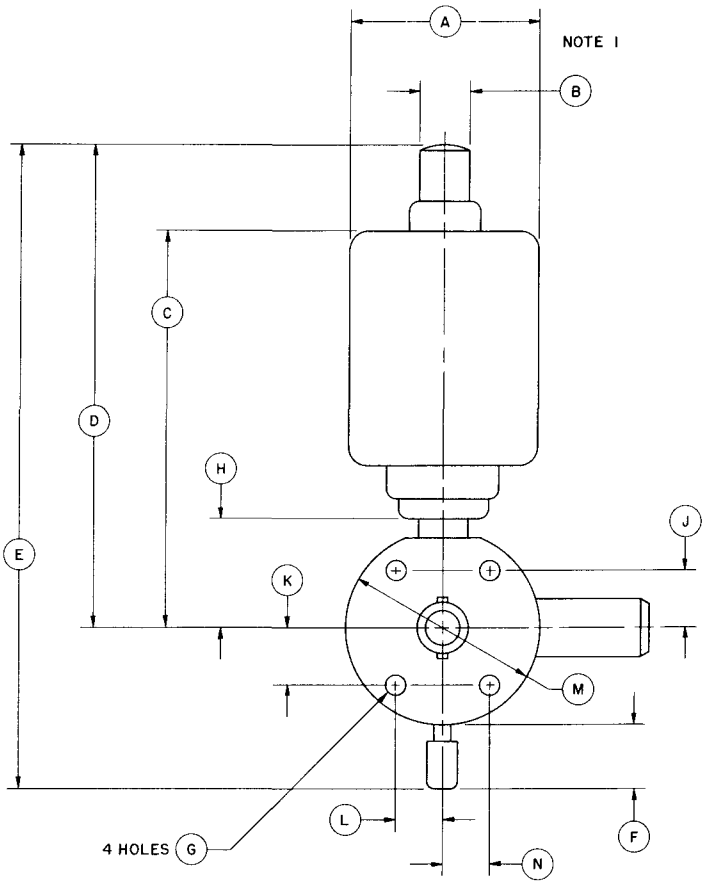

REF LTR	DIMENSIONS
A	$1\frac{1}{4}$ MAX DIA
B	.250 DIA
C	$2\frac{5}{16}$ MAX
D	$2\frac{3}{4}$ MAX
E	$3\frac{3}{4}$ MAX
F	$\frac{9}{16}$ MAX
G	.120 ± .002 DIA
H	$\frac{17}{32}$ MIN
J	.287 ± .002
K	.287 ± .002
L	.241 ± .002
M	1.009 - .999 DIA
N	.241 ± .002
P	$1\frac{1}{8}$ MAX
R	.368 - .360
T	.310 ± .005 DIA
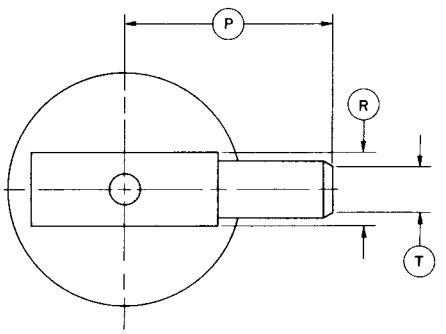
NOTE 1:
MAX PROJECTION OF RESERVOIR LIES WITHIN CYLINDER OF $1\frac{1}{4}$ DIA WITH AXIS CO-LINEAR WITH TUBE AXIS