WESTINGHOUSE ELECTRIC CORPORATION

X-RAY TUBE DATA SHEET

Electron Tube Type 5782

The 5782 tube is a removable insert x-ray tube designed for heavy duty service.

GENERAL

Electrical Data		
Filament current range	3.5 to 5.5	Amperes
Filament voltage range	3.5 to 10	Volts
Mechanical Data		
Type of cooling	Air	
Focal spot size		
Projected length	1.5	mm
Width	1.5	mm
Outline drawing number	5782	
Mounting position	Any	

MAXIMUM RATINGS

Heat capacity	270,000	*Heat units
Continuous rating	15,000	Heat units per minute
Maximum fluoroscopic rating at a loading of 425 (kv x ma)**	20	Minutes

	Full Wave	Half Wave	Self-rectified Inverse	Self-rectified Useful	Units
Peak plate voltage	100	100	100	90	Kilovolts
Value of dc average current at maximum voltage rating for 1/20 second	37	24.5		19.5	Milliamps.

Table of short-time ratings which are given as the product of peak kv useful times dc average milliamperes.

Time	Full Wave	Half Wave	Self-rectified
0.1 Sec.	3480	2350	1700
1 "	2770	2025	1520
5 "	2270	1800	1400
30 "	1700	1520	1250

* Heat units are defined as the product of the peak voltage in kilovolts, dc average current in milliamperes, and the exposure time in seconds, and is proportional to energy.

**Kv x ma is defined as the product of peak kv times dc average ma and is proportional to power.

WESTINGHOUSE ELECTRIC CORPORATION

X-RAY TUBE
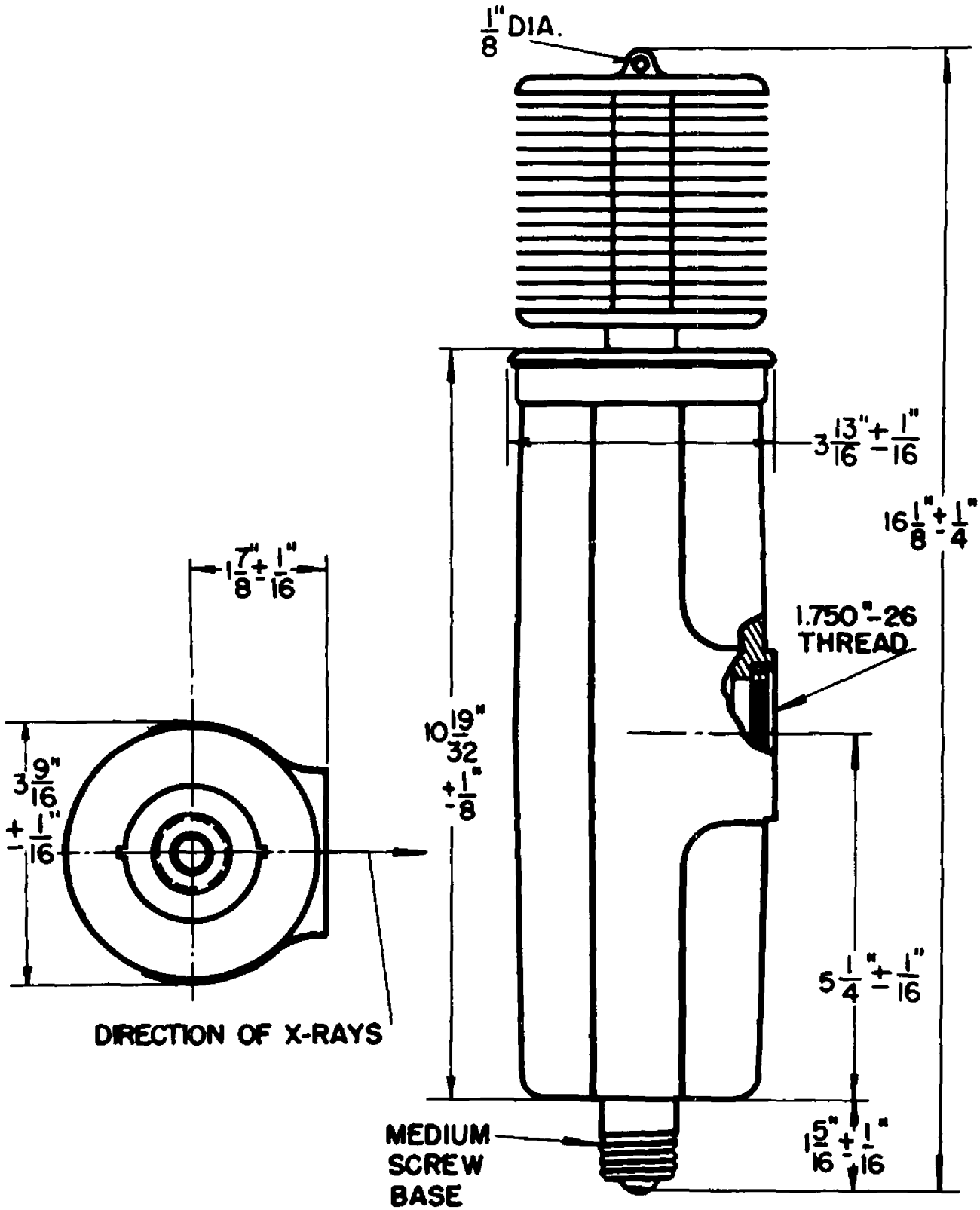
TUBE TYPE 5782