CENTRAL ELECTRONIC
MANUFACTURERS, INCORPORATED
DENVILLE, NEW JERSEY

RECTIFIER AND CLIPPER DIODE

DESCRIPTION

The Central Tube type 576A is a rugged, compact, high vacuum rectifier. This tube is most suitable in applications where high inverse voltages and ambient temperatures preclude the use of mercury vapor and gas filled rectifiers or clipper diodes. The Central 576A is mechanically and electrically interchangeable with its earlier version (tube type 576) and offers greater ruggedness in the anode supporting structure.

SPECIFICATIONS

ELECTRICAL

Filament ..... Thoriated Tungsten

	Rectifier Service	Clipper Service
Filament voltage (volts a.c.)	5.0	5.4
Filament current (amps.)	14.0	15.0
Peak inverse voltage (volts max.)	25,000	25,000
Peak anode current (amps. max.)	2.5	12.0
Average anode current (amps.)	0.500	——
R.M.S. Anode current (amps.)	——	0.800

PHYSICAL

Overall length ..... 7.5 inches max.
Overall diameter ..... $2\frac{5}{16}$ inches max.
Bulb T-18
Cap ..... Integral KOVAR cap
Base ..... Industrial 412 with metal shell
Weight ..... 5.7 ounces
Type of cooling ..... Radiation (air)

OPERATING NOTES

Mount the Central tube type 576A tube vertically with adequate air space for ventilation. Anode temperature should not exceed 800°C. The base fits a standard 4 pin super jumbo wafer socket.

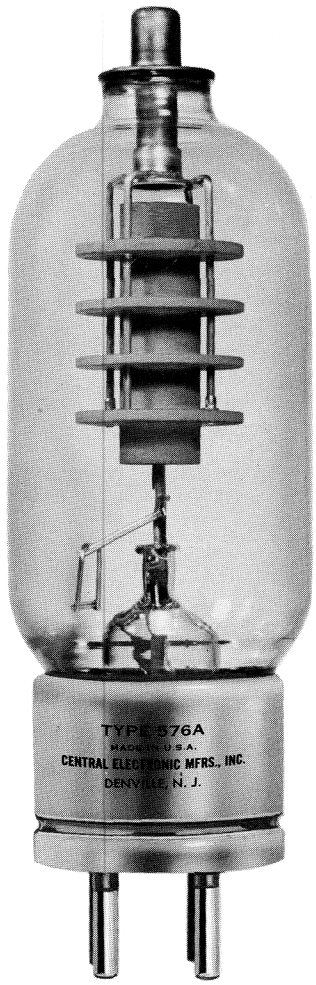

CENTRAL RECTIFIER TYPE 576A

CENTRAL ELECTRONIC

MANUFACTURERS, INCORPORATED

DENVILLE, NEW JERSEY

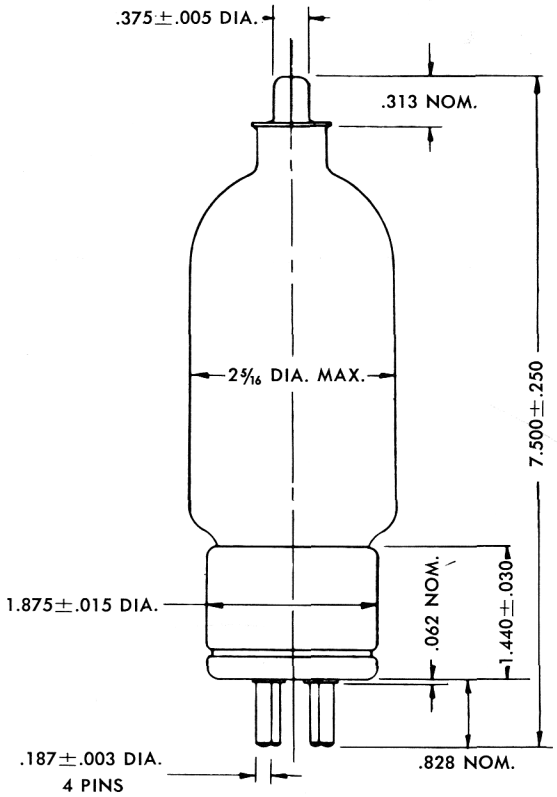

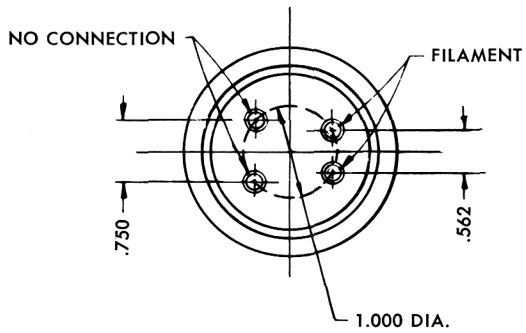

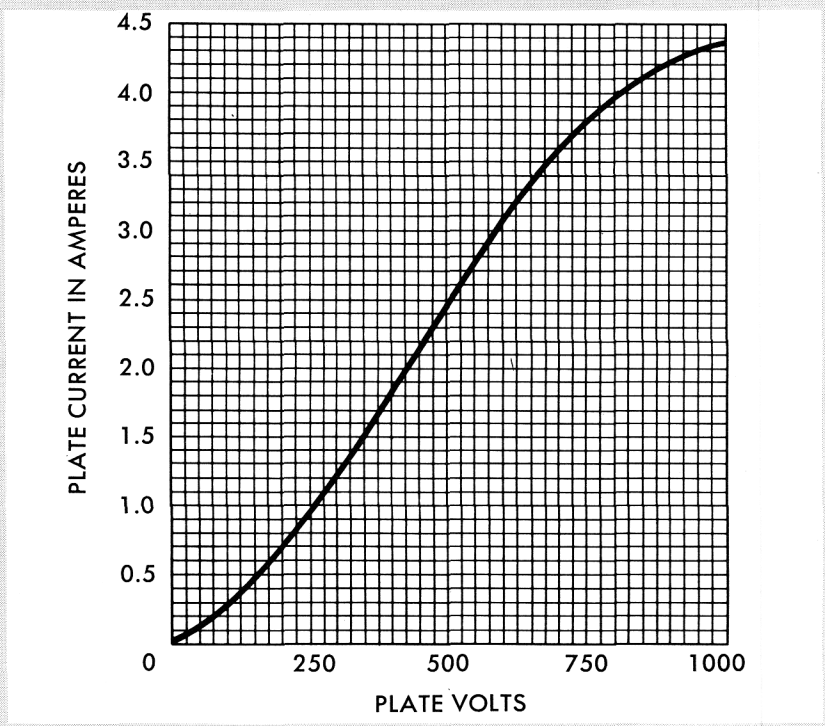

AVERAGE PLATE CHARACTERISTICS

SUBSIDIARY OF NUCLEAR CORPORATION OF AMERICA, INC.

©N 5M-10 57

Printed in U.S.A.