Central ELECTRONIC
MANUFACTURERS
DENVILLE, NEW JERSEY

CENTRAL POWER TRIODE TYPE

5736

PLATE DISSIPATION -3KW

POWER TRIODE

DESCRIPTION

The 5736 is a three-electrode tube designed for use as a modulator, amplifier or oscillator in AM, FM and TV broadcasting service, high-frequency communications systems, and induction and dielectric heating equipments. Four grid terminals provide a low-inductance connection to the grid making the tube suited especially to cathode-drive operation. The cathode is a thoriated-tungsten filament connected for single-phase operation. The anode is forced-air cooled and can readily dissipate 2.5 kw with nominal air flow. Special features include: precise and stable alignment of electrodes to prevent grid-cathode shorts and to assure reliability and uniform operation, brazed radiator construction to eliminate hot-spotting and its detrimental effects. Maximum ratings of 5.0 kv dc plate voltage and 5.0 kw plate input apply at frequencies up to 60 mc; operation at 100 mc is permissible with plate voltage and input reduced to 80% of maximum ratings.

SPECIFICATIONS

ELECTRICAL

Filament Voltage	6.0 Volts
Filament Current	60 Amps
Filament Cold Resistance	0.016 Ohms
Amplification Factor	22
Interelectrode Capacitances:	
Grid-Plate	16 $\mu\mu f$
Grid-Filament	19 $\mu\mu f$
Plate-Filament	0.8 $\mu\mu f$

PHYSICAL

Mounting Position	Vertical, Anode Up or Down
Type of Cooling	Forced Air
Maximum Incoming Air Temperature	45°C
Required Air-Flow on Anode**	150 cfm
Static Pressure, Inches Water	2.8 Inches
Maximum Radiator Temperature	180°C
Required Air-Flow to Bulb and Seals	
Air-Flow through radiator normally is sufficient	
Maximum Bulb Temperature	160°C
Net Weight, approximate	3 lbs.

**Except television ratings which require 180 cfm of cooling air at 4 inches water static pressure.

MAXIMUM RATINGS AND TYPICAL OPERATING CONDITIONS

(CONTINUOUS COMMERCIAL SERVICE)

AUDIO-FREQUENCY POWER AMPLIFIER AND MODULATOR CLASS B

MAXIMUM RATINGS, ABSOLUTE VALUES

D-C Plate Voltage	3000 volts
*Maximum Signal D-C Plate Current**	1.4 amps
Maximum Signal Plate Input*	4200 watts
Plate Dissipation*	2500 watts

TYPICAL OPERATION

(Unless otherwise specified, values are for two tubes)

D-C Plate Voltage	3000 volts
D-C Grid Voltage	—160 volts
Peak A-F Grid-to-Grid Voltage	820 volts
Zero Signal D-C Plate Current	0.66 amp
Maximum Signal D-C Plate Current	2.80 amps
Effective Load Resistance, Plate-to-Plate	3060 ohms
Maximum Signal Driving Power, approx.	140 watts
Maximum Signal Power Output, approx.	4350 watts
Load Resistance (per tube)	765 ohms

RADIO-FREQUENCY AND POWER AMPLIFIER -- CLASS B

Carrier conditions per tube for use with a maximum modulation factor of 1.0

MAXIMUM RATINGS, ABSOLUTE VALUES

D-C Plate Voltage	3500 volts
D-C Plate Current	1.75 amps
Plate Input	3500 watts
Plate Dissipation	2500 watts

TYPICAL OPERATION

D-C Plate Voltage	3000 volts
D-C Grid Voltage	—160 volts
Peak R-F Grid Voltage	280 volts
D-C Plate Current	1.1 amps
D-C Grid Current, approx.	0.050 amp
Driving Power, approx.††	15 watts
Power Output, approx.	800 watts

RADIO-FREQUENCY POWER AMPLIFIER -- CLASS B

Grounded-Grid, Wide-Band Television Service, Maximum Frequency — 88 Megacycles

MAXIMUM RATINGS, ABSOLUTE VALUES

D-C Plate Voltage	3500 volts
D-C Plate Current	1.75 amps
Plate Input	4000 watts
Plate Dissipation##	2800 watts

TYPICAL OPERATION

D-C Plate Voltage	2600 volts
D-C Plate Current:	
Synchronizing Level	2.32 amps
Black Level	1.47 amps
D-C Grid Voltage	—160 volts

PEAK R-F GRID VOLTAGES:

Synchronizing Level	535 volts
Black Level	400 volts

D-C GRID CURRENT:

Synchronizing Level	0.430 amp
Black Level	0.136 amp

DRIVING POWER, APPROX.:

Synchronizing Level	1160 watts
Black Level	535 watts

POWER OUTPUT, APPROX. #:

Synchronizing Level	3680 watts
Black Level	1690 watts

RADIO-FREQUENCY POWER AMPLIFIER AND OSCILLATOR CLASS C TELEGRAPHY

Key-down conditions per tube without amplitude modulation†

MAXIMUM RATINGS, ABSOLUTE VALUES

	60 mc	110 mc
D-C Plate Voltage	5000	3500 volts
D-C Grid Voltage	—1000	—700 volts
D-C Plate Current	1.4	1.4 amps
D-C Grid Current	0.5	0.5 amp
Plate Input	5000	3500 watts
Plate Dissipation	2500	2500 watts

TYPICAL OPERATION

	60 mc	110 mc	
D-C Plate Voltage	5000	3500	3500 volts
D-C Grid Voltage	—850	—600	—300 volts
Peak R-F Grid Voltage	1200	940	555 volts
D-C Plate Current	1.0	1.0	1.0 amps
D-C Grid Current	0.210	0.250	0.155 amp
Driving Power, approx.	250	235	85 watts
Power Output, approx.	4100	2800	2550 watts

PLATE-MODULATED RADIO-FREQUENCY POWER AMPLIFIER CLASS C TELEPHONY

Carrier conditions per tube for use with a maximum modulation factor of 1.0

MAXIMUM RATINGS, ABSOLUTE VALUES

D-C Plate Voltage	3500 volts
D-C Grid Voltage	—1000 volts
D-C Plate Current	1.4 amps
D-C Grid Current	0.5 amp
Plate Input	4000 watts
Plate Dissipation	1650 watts

TYPICAL OPERATION

D-C Plate Voltage	3500 volts
D-C Grid Voltage	—600 volts
Peak R-F Grid Voltage	950 volts
D-C Plate Current	1.14 amps
D-C Grid Current, approx.	0.28 amp
Driving Power, approx.	270 watts
Power Ouptut, approx.	3200 watts

*Averaged over any audio-frequency cycle of sine-wave form.

††At crest of audio-frequency cycle with modulation factor of 1.0.

##Requires 180 cfm of cooling air at 4 inches static pressure.

#Includes power transferred from driver stage.

†Modulation essentially negative may be used if the positive peak of the carrier envelope does not exceed 115% of the carrier condition.

APPLICATION NOTES

Maximum ratings apply up to 60 megacycles. The tube may be operated at higher frequencies provided the maximum values of the plate voltage and power input are reduced according to the tabulation below. All other maximum ratings remain as shown above. Special attention should be given to adequate ventilation of the bulb at these frequencies. See special television service ratings.

Percentage of Maximum Rated Plate Voltage and Plate Input:

Frequency	60	100	200 mc
Class B	100	85	60%
Class C Plate Modulated	100	80	50%
Class C Unmodulated	100	80	50%

CHARACTERISTIC RANGE VALUES FOR EQUIPMENT DESIGN

CHARACTERISTIC:	CONDITIONS	LIMITS	
		Min.	Max.
Grid Voltage	$e_b = 1000$ volts; $i_b = 6$ amps	——	360 Volts
Grid Current	$e_b = 1000$ volts; $i_b = 6$ amps	——	2.2 Amps.
Plate Voltage	$E_c = -20$ volts; $I_b = 0.40$ amp E_b	1150	1650 Volts
Plate Voltage	$E_c = -30$ volts; $I_b = 0.40$ amp E_b	1370	1870 Volts
Peak Cathode Current*		10	—— Amps.
Power Output	$E_b = 5000$ volts; $I_b = 1.0$ amp $E_c = -850$ volts; $I_g = 0.3$ amp $f = 60$ megacycles	3800	—— Watts

*Represents maximum usable cathode current for tube as plate current plus grid current for any condition of operation.

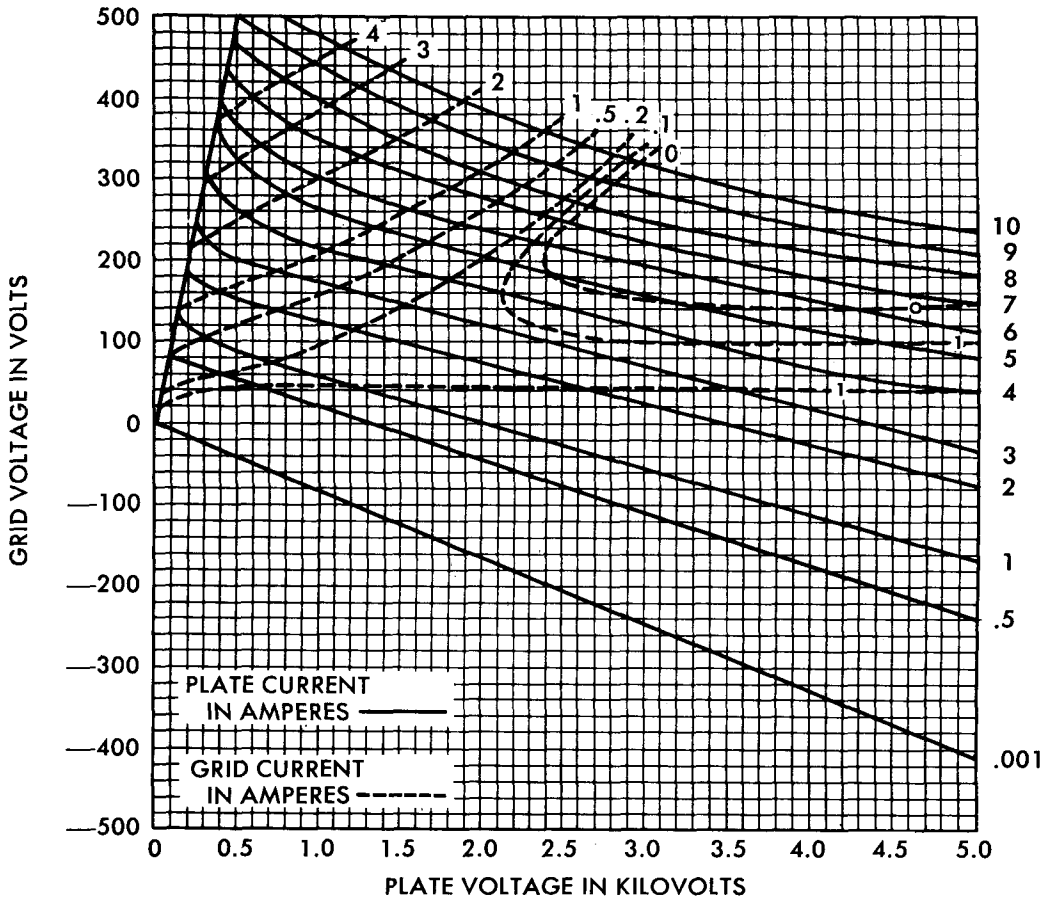

CONSTANT CURRENT CHARACTERISTICS

CENTRAL POWER TRIODE TYPE

5736

PLATE DISSIPATION -3KW

Central ELECTRONIC MANUFACTURERS

DENVILLE NEW JERSEY

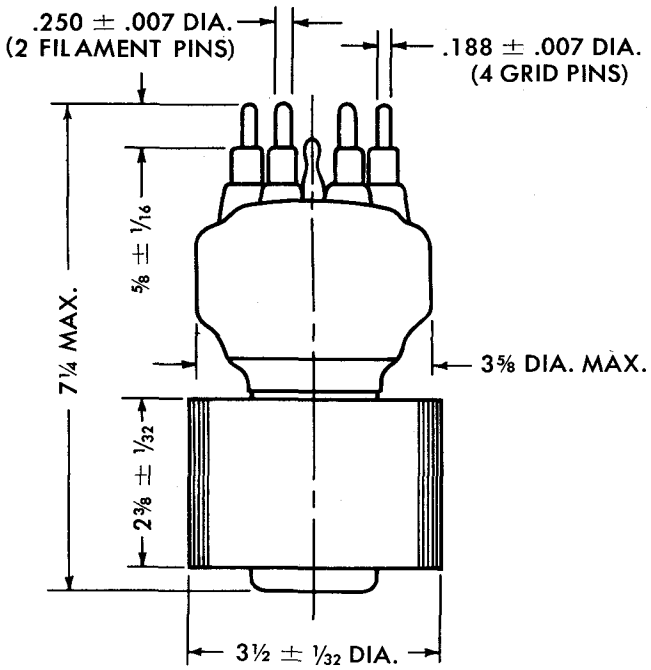

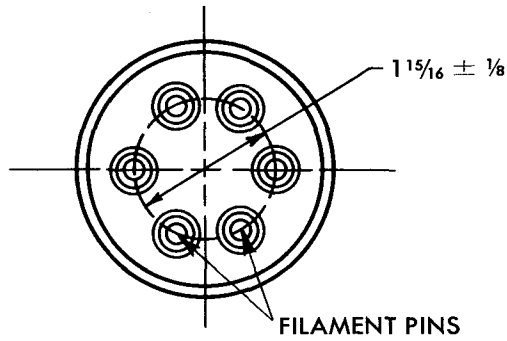

NOTE
6 PINS TO BE CONCENTRIC

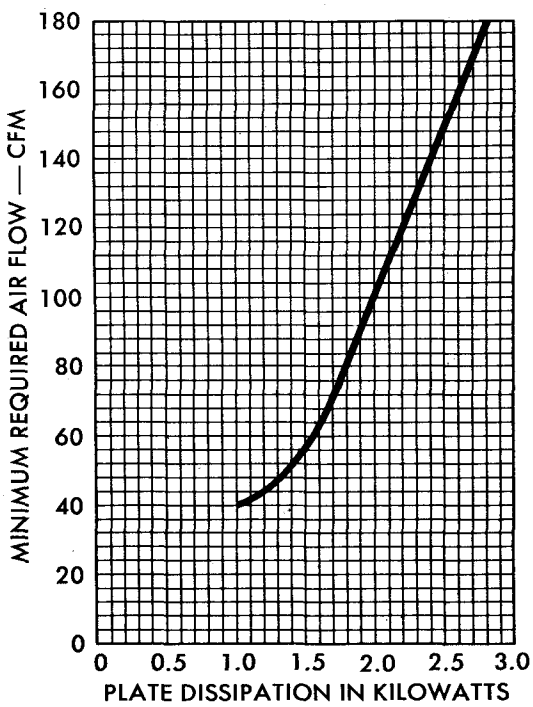

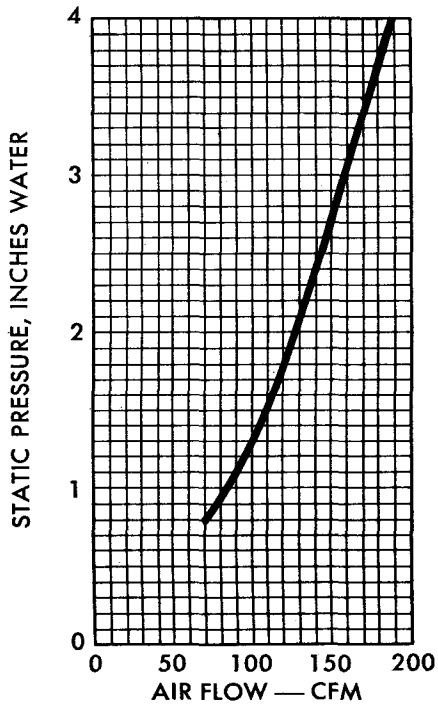

1M 8-60

AIR COOLING CHARACTERISTICS