NATIONAL UNION ELECTRON TUBE

NEW DATA

N.U. - 5730

30 CHANNEL RADIAL BEAM TUBE
SEPARATOR TYPE

APPLICATION:

The Type NU-5730 is a separator type electrostatically focused and deflected radial beam tube intended for high speed electronic switching or cummutation. It is capable of handling 30 different channels for transmission over a single carrier in multiplexing or telemetering applications.

The NU-5730 has thirty anode leads which are are brought out separately, a common lead for 29 of the control grids, and a single lead for the thirtieth control grid. This separate grid is useful for synchronization in telemetering or multiplexing operations. This is the output tube of such a system. It has a coated unipotential cathode.

RATINGS:

Heater Voltage (AC or DC) ±10%	6.3	volts
Maximum Plate Voltage	500	volts
Maximum Screen voltage (G_2)	300	volts rms ac 6ϕ

TYPICAL OPERATING CONDITIONS:

Heater Voltage	6.3	volts
Heater Current	0.450	amperes
Plate Voltage	375	volts*
Screen Voltage *(applied through dc focusing bias)*	300	volts rms ac 6ϕ
Focusing Bias *(positive end connected to cathode)*	-75 ±10	volts dc
Grid Voltage	0	volts dc
Single Channel Peak Plate Current	90	μa dc
Single Channel Transconductance	20	μmhos
Single Channel Amplification Factor	62	
Single Channel Plate Resistance	3	megohms
Single Channel Grid Bias for Plate Current Cut-off	-5	volts

* 450 volts applied through the focusing bias

PHYSICAL SPECIFICATIONS

Style	Special
Bulb	T-18
Base	Flying Leads
Mounting Position	Any

BASE PIN CONNECTIONS

PIN 1:	P-1	PIN 22:	P-16
PIN 2:	P-2	PIN 23:	P-17
PIN 3:	G_2-1	PIN 23:	G_2-4
PIN 4:	P-3	PIN 25:	P-18
PIN 5:	P-4	PIN 26:	P-19
PIN 6:	H	PIN 27:	H
PIN 7:	P-5	PIN 28:	P-20
PIN 8:	P-6	PIN 29:	P-21
PIN 9:	P-7	PIN 30:	P-22
PIN 10:	G_2-2	PIN 31:	G_2-5
PIN 11:	P-8	PIN 32:	P-23
PIN 12:	P-9	PIN 33:	P-24
PIN 13:	K	PIN 34:	Mica Rings
PIN 14:	P-10	PIN 35:	P-25
PIN 15:	P-11	PIN 36:	P-26
PIN 16:	P-12	PIN 37:	P-27
PIN 17:	G_2-3	PIN 38:	G_2-6
PIN 18:	P-13	PIN 39:	P-28
PIN 19:	P-14	PIN 40:	P-29
PIN 20:	G_1-1 to G_1-29	PIN 41:	P-30
PIN 21:	P-15	PIN 42:	G_1-30

NOTES: Due to the finite number of screen elements, the I_p/E_g characteristics are not identical for all channels. The following curves show these variations:

Curve A shows the characteristics of those channels adjacent to the center of the screen segments: Channels 2, 3, 7, 8, 12, 13, 17, 18, 22, 23, 27, and 28.

Curve B corresponds to the channels adjacent to the edge of the screen segments: Channels 1, 4, 6, 9, 11, 14, 16, 19, 21, 24, 26, 29.

Curve C depicts the channels corresponding to gaps between screen segments: Channels: 5, 10, 15, 20, 25, and 30.

(Over)

from RTMA release #961, April 9, 1950

MARCH 1951

Research Division

ORANGE NATIONAL UNION RADIO CORPORATION NEW JERSEY

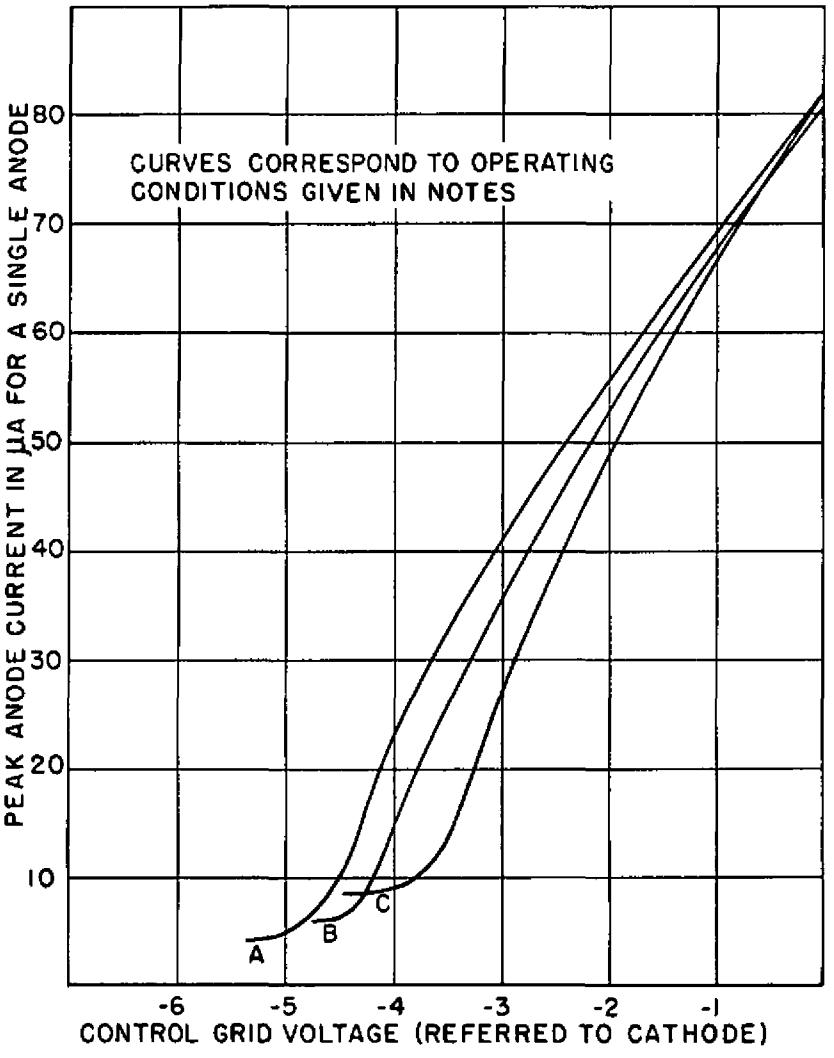

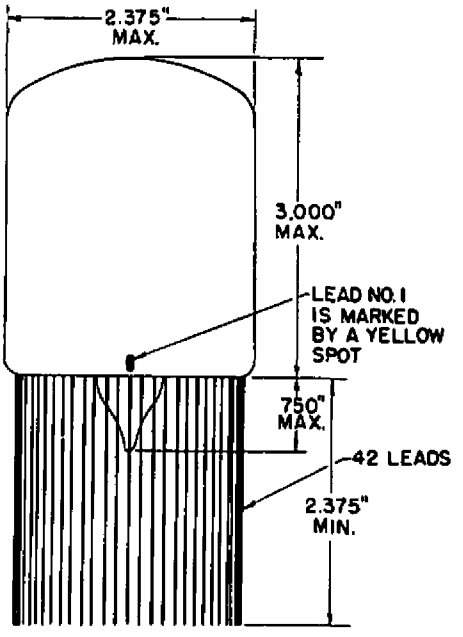

OUTLINE DRAWING

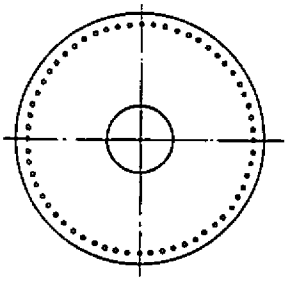

BOTTOM VIEW

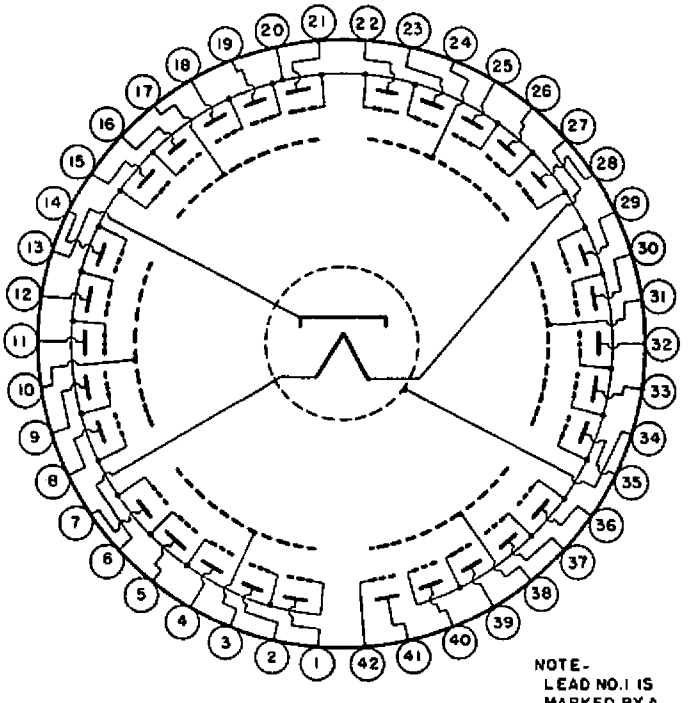

NOTE-
LEAD NO. 1 IS MARKED BY A YELLOW DOT

NU-5730
BASING DIAGRAM

RADIAL BEAM TUBES

ELECTROSTATICALLY FOCUSED

GENERAL INFORMATION

The National Union electrostatically focused radial beam tubes offer the advantage of high speed switching and commutation without mechanical moving parts. In these tubes an electrostatic field serves both to focus and to direct an electron beam, and if the field is made to rotate the beam whirls with it. As the direction of the beam varies it reaches different channels in turn, through which signals can be injected or extracted.

The electrostatic field is established by applying suitable voltages to a number of screen segments surrounding a central cathode. For instance, in a tube with six screen segments a six-phase a.c. voltage applied to the segments results in a rotating electrostatic field much in the manner of the rotating magnetic field in the stator of a six-pole electric motor.

To hold the beam in any particular direction it is only necessary to apply d.c. potentials to the screen segments respectively equal to the instantaneous values of the various phase voltages when the beam is oriented in the wanted direction. For example, in a six segment design the beam will hit the middle of a screen segment when that segment is at maximum screen voltage, the two adjacent segments at half that voltage, and the other three segments at minus the voltage of their respective opposites; to hit the gap between two adjacent segments their potential should be .866 times the maximum, that of the opposite segments should be the negative of that value, and the other two should be at zero potential.

The spacing between the screen segments as well as windows in the segments themselves constitute a series of slots all around the cathode, each acting as the entrance to a particular channel. Beyond that entrance slot each channel consists of whatever system of elements, grid, anodes, etc. is required for the function to be performed.

In order to make the best use of the beam most applications require it to be of about the same width as the slots when it reaches the screen. This is obtained by applying to the cathode a positive focusing bias which has the effect of distorting the electrostatic field and causing the beam to converge as wanted. Proper focusing is important in most applications, for too wide a beam leads to crosstalk between channels, too narrow a beam leads to reduced channel current and loss in efficiency. It is recommended that specifications be closely followed. The cathode bias can be obtained conveniently by the use of a self-biasing resistor.

The characteristics of individual channels depend upon the design of the particular type of tube. They are given in the data sheets for each type. These include basing arrangement and circuit data as well.

For many applications this tube is used in the equivalent of a time division multiplex signaling system. Two types of tubes are required for such a system; one, at the input, in which the signal grids are brought out individually, but the anodes are all internally tied to a common lead, and the other, at the output of the system, in which the grids are tied together and the anodes brought out individually. These two types are respectively designated as "multiple grid" and "multiple anode" types, symbolized by the letters G or A following the developmental type numbers or the class designation. By class designation is meant a code by which radial beam tubes (RB) are classified as magnetically (M) or electrostatically (E) focused, and as having a given number of channels (10, 12, 30). Such are, for instance, classes RBM10G, RBE12G, RBE12A, RBE30G, RBE30A. Tubes made with both grids and anodes brought out individually are identified by the two letters "GA" used simultaneously.

Multiple grid, or G, types have also been occasionally designated as input, transmitting, or collector types symbolized by letters T or C; multiple anode, or A, types have been termed output, receiving, or separator types, symbolized by letters R or S. These designations, however, are abandoned in favor of the more explicit and generally applicable ones first mentioned.

As an example, the figure on page 2 illustrates in a cut-away view the general design of a 12-channel electrostatically focused radial beam tube.

For details on operating conditions, characteristics, physical data and applications please refer to the technical data sheets available for each type of radial beam tube.

RBE-480416

RADIAL BEAM TUBES

ELECTROSTATICALLY FOCUSED

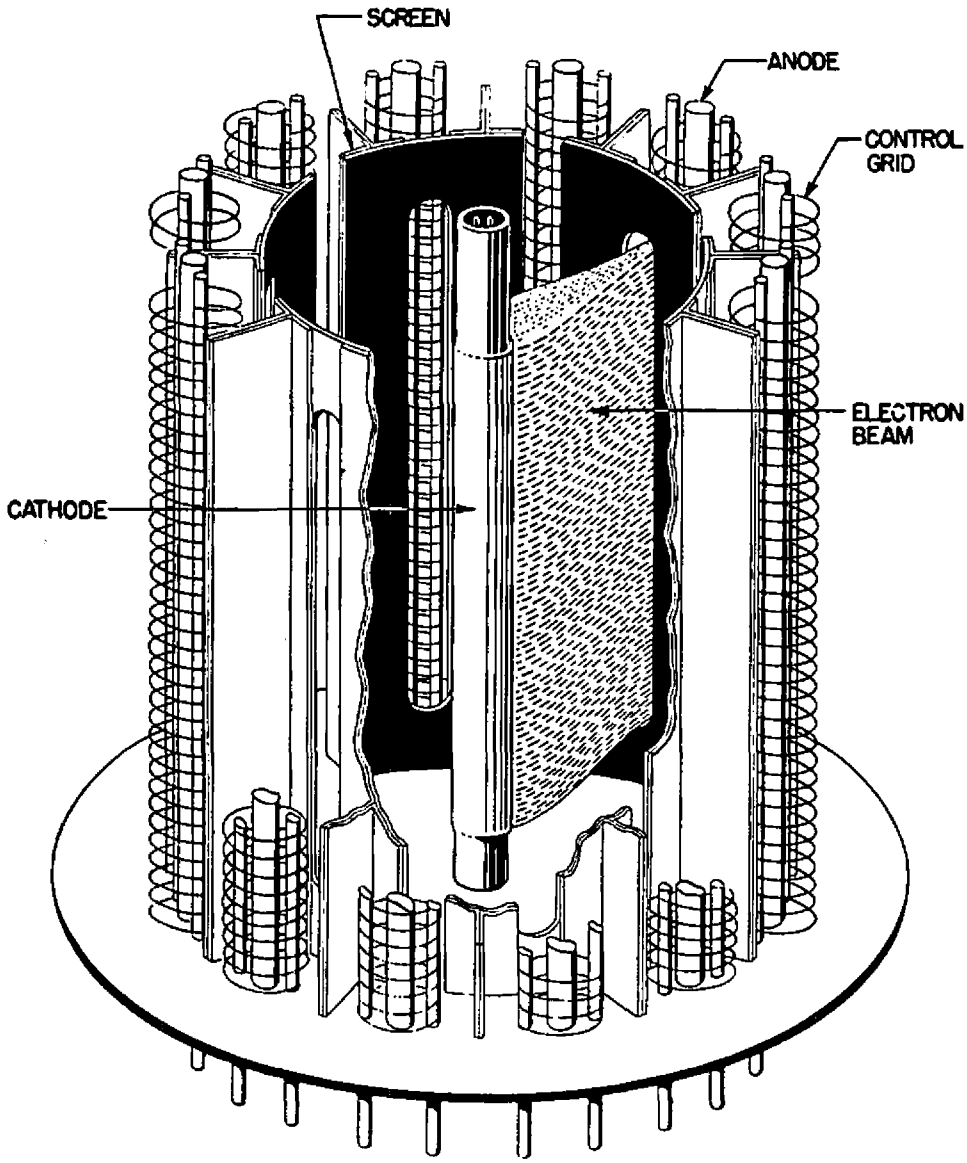

CUT-AWAY VIEW

12-CHANNEL ELECTROSTATICALLY FOCUSED
RADIAL BEAM TUBE

RBE-480416