Specification for oscilloscope CRT

Type: 56862

PDS

Professional Display Systems B.V.

PDS
Professional Display Systems B.V.

CONTENTS

MECHANICAL DIMENSIONS **1**

GENERAL DATA and PERFORMANCE **3**

PRECAUTION **10**

MECHANICAL DIMENSION

1. DIMENSIONAL OUTLINE & BASE CONNECTION (Unit: mm)

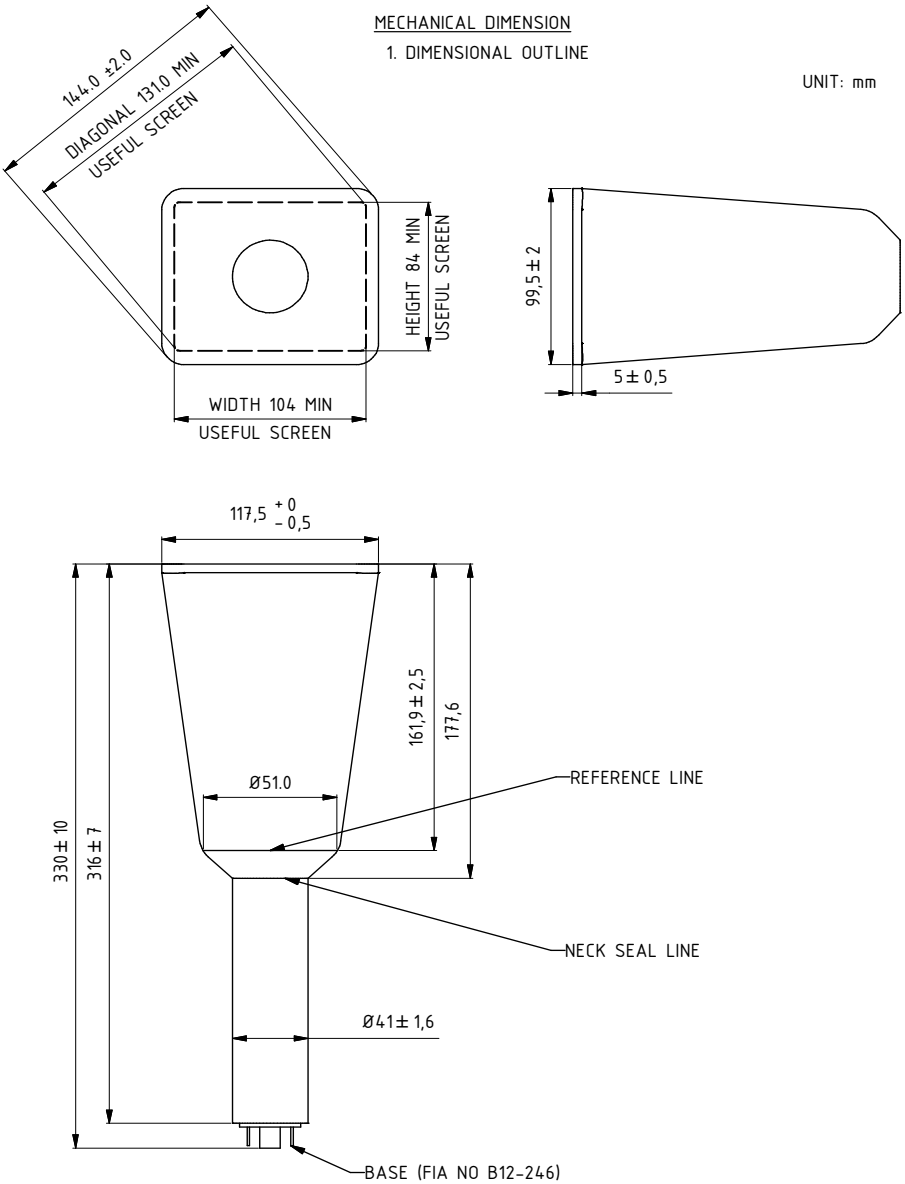

Mechanical outlines.

2. Internal Graticule

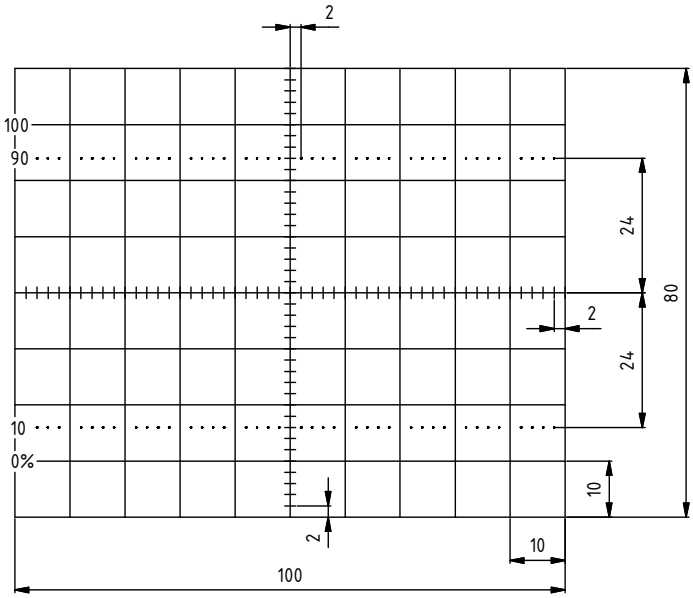

Graticule color: Red
Graticule line width: 0.20 ± 0.05 mm

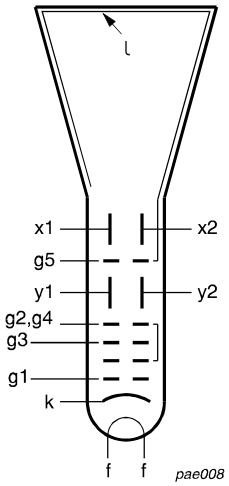

Pin arrangement, bottom view

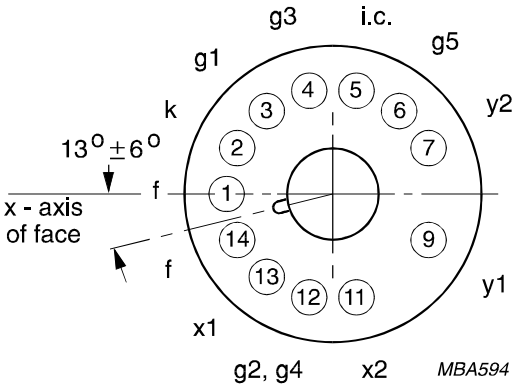

Electrode configuration

GENERAL DATA AND PERFORMANCE

1. GENERAL DATA SHEET

Use	Oscilloscope					
Type	Electrostatic deflection, Electrostatic focusing Mono acceleration					
Construction	Rectangular flat face, Internal graticule					
Out Line	Overall length 330 ±10mm, Neck diameter 41.0 ±1,6mm Greatest diagonal 145 ± 2mm Screen useful area 104 x 84mm²					
Bulb	6” - 41Ø					
light transmittance	Approx. 89%					
Base	EIA No. B12-246					
Phosphor	P31 (EIA No. 31) /GH					
Phosphorescence	Green					
Fluorescence	Green					
Persistence	Medium short					
Symbol & Unit	Vf (V)	Vg1 (Vdc)	Vg2(Vdc)	Vg3(Vdc)	Vg4(Vdc)	Vg5(Vdc)
Absolute max. rating	6,6	0	2750	1000	2750	2750
Absolute min. rating	5,7	-200	1500	-	1500	1500
Test condition	6,3	Adjust	2000	Focus	Adjust	2000
Symbol & Unit	Vkf(Vdc	Vd (V)	Rg1(MΩ)	Zd(MΩ)	-	-
Absolute max. rating	125	30	1.5	1.5	-	-
Absolute min. rating	-125	-	-	-	-	-
Test condition	-	-	-	-	-	-

Notes:

(1) All voltages are referred to cathode except for Vf and Vd.

(2) For optimum performance, the heater voltage of devices should be regulated at 6,3 V for 100% service voltage.

(3) Standard raster size and scanning frequency for test condition are as follows:

H x V = 100 x 80mm² F = 60 Hz (hor.), 4500 Hz (vert.)

2. TEST SPECIFICATION SHEET

TEST ITEMS	SYMBOL	METHOD	TEST CONDITION	MIN.	TYP.	MAX.	UNIT
Heater current	If	-		95	105	115	mA
Heater current DC leakage	Ifk	-	Vfk= ± 125V	-	-	30	uAdc
Grid No.1 leakage	LIg1	-		-5	-	-5	uAdc
G2 leakage	Lib1	-		-15	-	15	uAdc
Stray emission	SE	1)	Vg2=Vg4-2750Vdc	-	-	-	
Cutoff voltage	-Vg1	-	Visual extinction of a focused spot	25.0	45.5	66	Vdc
Modulation voltage	ΔVg1	-		-	-	35	Vdc
Cathode current	Ik	-		-	-	150	uAdc
Focusing voltage	Vb1	-		150	175	200	Vdc
Deflection factor (X1-X2)	DFX	8)		18.0	18..5	19.0	Vdc/cm
Deflection factor (Y1-Y2)	DFY	8)		11.0	12.0	13.0	Vdc/cm
Pattern distortion	PD	2)		-	-	1.3	mm
Spot position	SP	3)		-	-	±7	mm
Spot displacement	SD	4)	Zd=10MΩ	-	-	10	mm
Angle between traces	α	5)		89.0	90.0	91.0	deg
Deflection linearity	DFU	6)		-	-	5	%
Astigmatism voltage	Vg4	7)		1900	2000	2100	Vdc
Vert. useful scan	BSPY	-		80	-	-	mm
Hor. useful scan	BSPX	-		100	-	-	mm
Screen quality	SQ	9)		-	-	-	
Internal graticule	IG	10)		-	-	-	
Gun to graticule alignment	DO	-	X1-X2: Hor. axis of graticule	-	-	5	deg

Notes: (1) Specified voltage values are referred to cathode except for ΔVg1

3. TEST SPECIFICATION SHEET (cont'd)

TEST ITEMS	SYMBOL	METHOD	TEST CONDITION	MIN.	TYP.	MAX.	UNIT
Capacitance Grid No.1 to all other electrodes	Cg1-all	-		-	6.2	-	pF
Cathode to all other electrodes	Ck-all	-		-	3.2	-	pF
X1 to al other electrodes except X2	Cx+ -all	-		-	4.5	-	pF
X2 to all other electrodes except X1	Cx- -all	-		-	4.5	-	pF
Y1 to all other electrodes except Y2	Cx- -all	-		-	3.5	-	pF
Y2 to all other electrodes except Y1	Cy+ -all	-		-	3.5	-	pF
X1 to X2	Cx-x	-		-	3.2	-	pF
Y1 to Y2	Cy-y	-		-	1.4	-	pF

4. TEST METHOD

**** Standard Test Condition ****

Unless otherwise specified, use the voltages in the general data sheet for all test conditions and evaluate after adjusting astigmatism voltage (Vg4)

The tube shall be shielded against external magnetic and electrical influences.

1) Stray Emission

Ambient light measured at tube face shall be approximately 1 lm/m²

Limits: reject tube, if stray emission is observed.

2) Pattern Distortion

Set up the specified test voltage and display a horizontal single line.

Adjust the horizontal single line to be aligned with the horizontal axis of internal graticule by controlling the rotation coil current.

A graticule (Figure 1) consisting of concentric squares of 101.3 x 81.0 mm² and 98.7 x 79.0 mm², is aligned with the internal graticule.

Evaluate the vertical or horizontal single lines fall between these squares.

Limits: the line center of the edge of the single line must fall between these squares.

Fig. 1. Pattern distorsion gauge

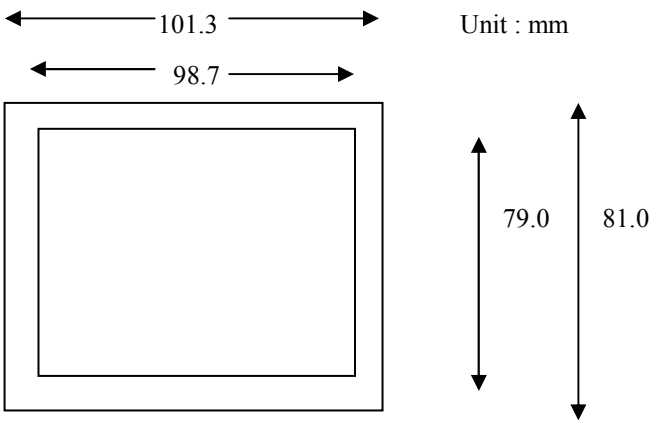

3. Spot Position

Connect X1, X2, Y1 and Y2 with g4 and g5
An undeflected focused spot shall be within +/- 7mm horizontally and +/- 7mm vertically from the center of the screen.

Caution: the grid No.1 voltage shall be set at a value which will avoid damage to the screen.
Limits: Maximum spot position…… 14 mm max.

4. Spot Displacement

The tube shall be operated as specified in Par. 3), insert a 10 Mohm resistor between deflection electrodes and g4 and g5
The spot displacement produced by shorting of each resistor in turn shall not exceed the specified value.

Limit: Maximum spot displacement ……10mm max.

5. Angle Between Traces

The angle between horizontal (X1-X2) and vertical (Y1-Y2) traces shall not exceed the specified value.
The angle shall be measured counter clockwise from the horizontal trace.

Limits: angel between traces ……90 +/- 1.0 deg.

6. Deflection Linearity

Under the specified test condition, display the controlled 20mm single line at the center of horizontal graticule axis. The 20mm line is then positioned in horizontal direction from the center to +/- 4 major divisions without changing the horizontal deflection gain. The line length of each point is measured then.
Same as the above procedure, the displayed 20mm single line at the center of vertical graticule axis is positioned in direction from the center to +/- 3 major divisions and measured.
The line length at each four points shall not exceed the specified value.

Limits: Maximum deflection linearity ……+/- 5% max.

Note: Deflection linearity presented by deviation percentage follows

$$\frac{\text{(Line length in mm after positioning)} - 20\text{mm}}{20\text{mm}} \times 100\%$$

7. Astigmatism voltage (Vg4)

   Under the specified test condition, the Vg4 voltage for astigmatism adjustment shall be within the limits specified.

   Limites: Maximum astigmatism voltage……2100 Vdc Max.
   Minimum astigmatism voltage..... 1900 Vdc Min.

8. Deflection Factor

   Measure the deflection plate (X1-X2) DC voltage for positioning a focused spot horizontally from -5 cm to +5 cm along the graticule axis.
   The above deflection voltage divided 10 cm is the horizontal deflection factor in Vdc/cm

   The deflection plate (Y1-Y2) DC voltage for positioning the spot vertically from –4 cm to +4 cm along the graticule axis, divided 8 cm is the vertical deflection factor in Vdc/cm.

   Limits: Horizontal defl. factor DFX …… 18.0 to 19.0 Vdc/cm
   Vertical defl. factor DFY …… 11.0 to 13.0 Vdc/cm

9. Screen and faceplate Quality
   This specification shall be applied in all screen area of 104 x 84 mm²

   1) Criteria of defects:
      Defects included blisters, bubbles, elongated blisters, stones, opaque spots, pin holes, and dirt.

      Acceptable size and number of defects are in referred criteria chart:

      Elliptical defects should be inspected by the following equivalent diameter formula.

      $$\text{Equivalent Spot Diameter} = \frac{(\text{Length} + \text{Width})}{2}$$

(2) Defects classification and size:

Table 2. Defects classification an size (mm)

Classification	Size	Acceptable No's	Min. Separation
Blisters, bubbles	0.41 to 0.60	4 max.	25
Stones, opaque spots	0.21 to 0.40		
Pinhole, dirt	0.21 to 0.40		
(See note) Elongated blisters	with: 0.20 to 0.35 Max. length: 6.0		

Note: Elongated blisters shall not be subjected to the equivalent diameter formula.

Limits: The tube with defects larger than the above table 2, should be rejected
Defects smaller than the above table 2 should not be counted.

10. Internal Graticule Quality

The graticule lines must be of uniform density. Obvious line breaks are specified in table 3.

Table 3: graticule defects

Line Breaks Size (mm)	Minimum Separation (mm)	Acceptable Numbers (pcs)	
Less then 0.20	----	no count	Total 15
0.21 to 0.45	10	14	
0.46 to 0.75	25	5	
0.76 to 1.00	----	1	
Greater than 10.1	----	0	

Note: (1) Two or more breaks within any 1.0mm segments of the graticule line must be considered as one break whose length would be equal to the length of the segment.

(2) Line breaks must be visible from 38 cm.

PRECAUTION

Heater rating

Heater voltage range should not be exceeded in worst-case conditions of the application. Despite heater voltage range of +/- 10%, equipment should be designed so shat the heater voltage is applied at the typical RMS value. Range of +/- 10% is only for a probable variation with respect to apply voltage.
Exceeding voltage range will result in the short life or low light output, etc. of the tube.

Mounting

The mounting system of this tube should not put mechanical stress on, particularly in the splice area and mold-match line.
Equipment's mounting system should incorporate sufficient cushioning so that an impact force of more than 30 G is never applied to the tube, under normal condition of shipment or handling

Tube handling

Tubes should be kept in the shipping box or similar protective container until just prior to installation. Wear heavy protective clothing, including gloves and safety goggles with side shields, in areas handling unpacked and unprotected tubes to prevent possible injury from flying glass in the event tubes breaks. Handle tubes with extreme care.
Do not strike, scratch, or subject tubes to more than moderate pressure.
Particular care should be taken to prevent damage to the seal and splice area.

Other

© 2007 Professional Display Systems B.V. All rights reserved. Printed in the Netherlands.

The information presented in this document may be changed without notice.
It is advisable to contact the supplier for availability and latest data before designing this product into equipment. Publication of this document does not convey nor imply any license under patent- or other industrial or intellectual property rights.