The Machlett Laboratories, Inc.
1063 Hope Street • Stamford, Conn. 06907
Tel. 203-348-7511 • TWX 203-327-2496

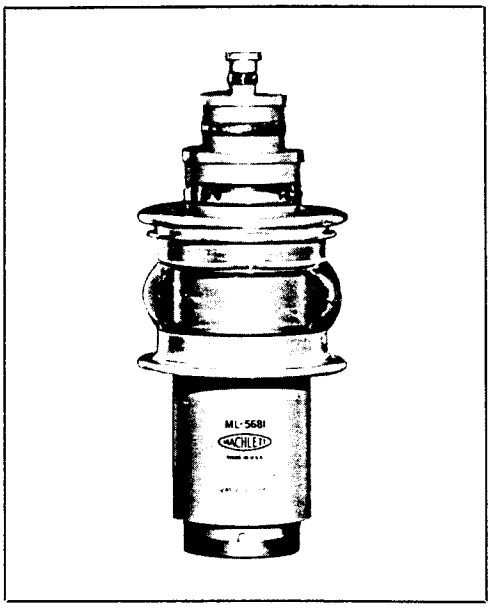

ISSUED 8-62

ML-5681

MACHLETT

DESCRIPTION

The ML-5681 is a compact, general-purpose, high-power electron tube designed for operation at frequencies up to 110 Mc. It is a coaxial-terminal, water- and forced-air-cooled triode capable of approximately 50 kW output at 110 Mc in cathode-drive circuitry with 10 kW driving power. Maximum ratings of 9 kVdc plate voltage and 90 kW plate input apply at frequencies up to 110 Mc; increased ratings of 15 kVdc plate voltage and 150 kW plate input are permissible at frequencies up to 30 Mc.

The ML-5681 has basic design features which make it suitable for use over a wide range of power and frequency in high-power AM, FM, and TV broadcasting, particle accelerator, and dielectric and induction heating services. This tube is ideally suited to cavity operation, and its low plate impedance makes it advantageous for broad-band service. Other features include high-conductivity glass-to-metal seals, sturdy electrodes, integral anode water jacket, quick-change water coupling, and heavy-wall copper anode designed to dissipate 75 kW. All electrodes mount directly from heavy copper rings, resulting in a structure which is electrically and mechanically superior to the conventional types of water-cooled electron tubes. The large-diameter seals provide increased strength and freedom from excessive heating. The cathode is a multistrand, thoriated-tungsten filament, completely balanced and stress free throughout life. The grid is capable of unusually high heat dissipation, contributing to maximum stability of tube performance and circuit operation.

GENERAL CHARACTERISTICS

Electrical		
Filament Voltage	12.0	Volts
Filament Current at 12.0 volts	220	Amps
Filament Starting Current, maximum	550	Amps
Filament Cold Resistance	0.0062	Ohms
Amplification Factor	25	
Direct Interelectrode Capacitances		
Grid-Plate	61	uuf
Grid-Filament	76	uuf
Plate-Filament	2.0	uuf
Mechanical		
Mounting Position	Vertical, Anode Down	
Type of Cooling	Water and Forced-Air	
Water Flow on Anode	See Water Cooling Characteristics	
Maximum Water Pressure	75	psi
Maximum Outlet Water Temperature	70	°C
Air Flow on Seals, approximate	250	cfm
Maximum Glass Temperature	165	°C
Net Weight, approximate	43	lbs.

MAXIMUM RATINGS AND TYPICAL OPERATING CONDITIONS

(Continuous Commercial Service)

Audio-Frequency Power Amplifier and Modulator Class B

Maximum Ratings, Absolute Values

D-C Plate Voltage	15000	volts
Max.-Signal D-C Plate Current*	11	amps
Max.-Signal Plate Input*	150	kW
Plate Dissipation*	75	kW

Typical Operation (Values are for two tubes)

D-C Plate Voltage	12000	14000	volts
D-C Grid Voltage	−430	−500	volts
Peak A-F Grid-to-Grid Voltage	1950	2150	volts
Peak A-F Plate-to-Plate Voltage	21000	24000	volts
Zero-Signal D-C Plate Current	2.0	3.0	amps
Max.-Signal D-C Plate Current	18.6	21.4	amps
Effective Load Resistance, Plate-to-Plate	1450	1400	ohms
Max.-Signal Driving Power, approximate	1.4	1.4	kW
Max.-Signal Power Output, approximate	150	200	kW

Radio-Frequency Power Amplifier Class B

Carrier conditions per tube for use with a maximum modulation factor of 1.0

Maximum Ratings, Absolute Values

D-C Plate Voltage	15000	volts
D-C Plate Current	9	amps
Plate Input	110	kW
Plate Dissipation	75	kW
Frequency	40	Mc

Typical Operation

D-C Plate Voltage	10000	12000	volts
D-C Grid Voltage	−350	−430	volts
Peak R-F Grid Voltage	515	615	volts
Peak R-F Plate Voltage	4200	5000	volts
D-C Plate Current	6.0	7.5	amps
D-C Grid Current	60	50	mA
R-F Load Resistance	435	420	ohms
Driving Power, approximate**	1.3	1.8	kW
Power Output, approximate	20	30	kW

Radio Frequency Amplifier Class B — Television Service

Synchronizing level conditions per tube, unless otherwise specified, in cathode-drive circuit—88 Mc, 5 Mc bandwidth

Maximum Ratings, Absolute Values

D-C Plate Voltage	9000	volts
D-C Plate Current	12	amps
D-C Grid Current	2.0	amps
Plate Input	100	kW
Plate Dissipation	75	kW
Frequency	88	Mc

Typical Operation

D-C Plate Voltage	7500	8000	volts
D-C Grid Voltage	−300	−320	volts
Peak R-F Driving Voltage			
Synchronizing level	780	870	volts
Pedestal level	590	650	volts
Peak R-F Plate Voltage			
Synchronizing level	5700	6200	volts
Pedestal level	4300	4600	volts
D-C Plate Current			
Synchronizing level	8.0	9.7	amps
Pedestal level	6.0	7.0	amps
D-C Grid Current, approx.			
Synchronizing level	0.55	0.85	amp
Pedestal level	0.080	0.220	amp
R-F Load Resistance	500	450	ohms
Driving Power at tube, approximate			
Synchronizing level	5.3	7.5	kW
Pedestal level	2.9	3.8	kW
Power Output, approximate***			
Synchronizing level	40	55	kW
Pedestal level	23	30	kW

Doherty High-Efficiency Linear Amplifier

Carrier conditions per tube, unless otherwise specified, for use with a maximum modulation factor of 1.0

Maximum Ratings, Absolute Values	Carrier Tube	Peak Tube	
D-C Plate Voltage	15000	15000	volts
D-C Grid Voltage	−3200	−3200	volts
D-C Plate Current	10	6†	amps
D-C Grid Current	2.0	1.0	amps
Plate Input	125	85†	kW
Plate Dissipation	75	75	kW
Frequency	30	30	Mc

Typical Operation

D-C Plate Voltage	12000	12000	volts
D-C Grid Voltage	−500	−1400	volts
Peak R-F Grid Voltage			
Carrier	900	1160	volts
Crest**	1220	2320	volts
Peak R-F Plate Voltage			
Carrier	10000	5000	volts
Crest**	10000	10000	volts
D-C Plate Current			
Carrier	6.7	0.2	amps
Modulated†	6.7	3.8	amps
D-C Grid Current			
Carrier	0.25	0	amp
Modulated†	0.45	0.24	amp
R-F Load Resistance	465	465	ohms
Driving Power, approximate**	1.5	4.0	kW
Power Output, approximate			
Carrier	54	1	kW
Modulated†	50	31	kW

Plate-Modulated R-F Power Amplifier Class C Telephony

Carrier conditions per tube for use with a maximum modulation factor of 1.0

Maximum Ratings, Absolute Values

D-C Plate Voltage	10000	volts
D-C Grid Voltage	−3200	volts
D-C Plate Current	9	amps
D-C Grid Current	2.0	amps
Plate Input	85	kW
Plate Dissipation	50	kW
Frequency	30	Mc

Typical Operation

D-C Plate Voltage	8000	10000	volts
D-C Grid Voltage	−1000	−1200	volts
Peak R-F Grid Voltage	1590	1850	volts
Peak R-F Plate Voltage	6700	8500	volts
D-C Plate Current	6.3	7.4	amps
D C Grid Current	1.0	1.2	amps
R-F Load Resistance	590	635	ohms
Driving Power, approximate	1.5	2.1	kW
Power Output, approximate	38	57	kW

Grid-Modulated R-F Amplifier Class C Telephony

Carrier conditions per tube, unless otherwise specified, for use with a maximum modulation factor of 1.0

Maximum Ratings, Absolute Values

D-C Plate Voltage	15000	volts
D-C Plate Current	8	amps
D-C Grid Current	2.0	amps
Plate Input	110	kW
Plate Dissipation	75	kW
Frequency	30	Mc

Typical Operation

D-C Plate Voltage	15000	volts
D-C Grid Voltage	−1400	volts
Peak R-F Grid Voltage	1460	volts
Peak R-F Grid Voltage for maximum modulation	440	volts
Peak R-F Plate Voltage	6500	volts
D-C Plate Current	3.2	amps
D-C Grid Current, approximate	10	mA
R-F Load Resistance	1100	ohms
Driving Power, approximate	15	watts
Power Output, approximate	19	kW

R-F Power Amplifier and Oscillator Class C Telegraphy

Key-down conditions per tube without amplitude modulation#

Maximum Ratings, Absolute Values

D-C Plate Voltage	9000	15000	volts
D-C Grid Voltage	−3200	−3200	volts
D-C Plate Current	12	12	amps
D-C Grid Current	2.0	2.0	amps
Plate Input	90	150	kW
Plate Dissipation	75	75	kW
Frequency	110	30	Mc

Typical Operation

Power Amplifier and Oscillator, Grid-Drive Circuit—30 Mc

D-C Plate Voltage	8000	12000	14000	volts
D-C Grid Voltage	−800	−1200	−1500	volts
Peak R-F Grid Voltage	1500	1950	2320	volts
Peak R-F Plate Voltage	6500	10000	12000	volts
D-C Plate Current	9.0	9.0	10.5	amps
D-C Grid Current	1.4	1.2	1.3	amps
R-F Load Resistance	405	560	635	ohms
Driving Power, approximate	2.0	2.2	3.0	kW
Power Output, approximate	52	90	115	kW

Power Amplifier, Cathode-Drive Circuit—110 Mc

D-C Plate Voltage	6000	9000	volts
D-C Grid Voltage	−600	−750	volts
Peak R-F Driving Voltage	1150	1350	volts
Peak R-F Plate Voltage	4700	7500	volts
D-C Plate Current	6.7	8.0	amps
D-C Grid Current	1.0	1.0	amp
R-F Load Resistance	490	635	ohms
Driving Power, approximate	8.0	10.2	kW
Power Output, approximate***	35	62	kW

* Averaged over any audio-frequency cycle of sine-wave form.

** At crest of audio-frequency cycle with modulation factor of 1.0.

*** Includes power transferred from driver stage.

† Average value with modulation factor of 1.0.

\# Modulation essentially negative may be used if the positive peak of the envelope does not exceed 115% of the carrier conditions.

MAXIMUM FREQUENCY RATINGS

Maximum ratings apply up to 30 Mc except as noted. The tube may be operated at higher frequencies provided the maximum values of plate voltage and power input are reduced according to the tabulation below. (Other maximum ratings are the same as shown above). Special attention should be given to adequate ventilation of the bulb at the higher frequencies.

Frequency	30	70	110	Mc
Percentage of Maximum Rated Plate Voltage and Plate Input				
Class B	100	96	60	%
Class C Plate Modulated	100	77	60	%
Class C Telegraphy	100	77	60	%

CHARACTERISTIC RANGE VALUES FOR EQUIPMENT DESIGN

Characteristic	Conditions		Limits Min.	Bogey	Max.
Grid Voltage	e_b = 1800 v; i_b = 50 a	e_c:	——	——	1100 volts
Grid Current	e_b = 1800 v; i_b = 50 a	i_c:	——	——	20 amps
Plate Voltage	E_c = 0 Vdc; I_b = 3 Adc	E_b:	2.3	2.9	3.5 kVdc
Plate Voltage	E_c = −200 Vdc; I_b = 3 Adc	E_b:	6.9	7.9	8.9 kVdc
Grid Voltage	E_b = 15 kVdc; I_b = 0.20 Adc	E_c:	−530	−620	−730 Vdc
Plate Power Output	E_b = 14 kVdc; E_c = −1500 Vdc I_b = 10.5 Adc; I_c = 1.3 Adc F = 30 Mc	P_o:	95	——	—— kW
Plate Power Output	E_b = 9 kVdc; E_c = −750 Vdc I_b = 8.0 Adc; I_c = 1.0 Adc F = 110 Mc	P_o:	44	——	—— kW

APPLICATION NOTES

Initial Inspection and Installation

When an ML-5681 is received, it should be unpacked and inspected as soon as possible. Care should be taken to keep from jarring the tube or the inner packing box, since the thoriated-tungsten filament may become damaged. To insure against straining the glass-to-metal seals, it is recommended that the tube be handled only by the anode water jacket, anode flange, or if necessary the grid terminal flange; it should never be handled by the cathode terminals. The tube should always be stored or mounted in a vertical position with the anode down.

A careful inspection should be made for any visible damage, such as glass cracks or broken filament strands, which may have occurred in transit. The tube should then be checked with an ohmmeter between grid and cathode terminals to determine whether or not a grid-cathode short has occurred.

A complete set of rubber gaskets is shipped with each ML-5681, and the new gaskets should be inserted in the mounting socket before installing a new or spare tube. The gaskets should be wiped with a clean lint-free cloth and then coated with a thin layer of the silicone grease supplied, before insertion in the socket.

If no interelectrode short is evident, the tube should be seated securely in the mounting socket and all electrical connections made, taking care that positive contact is obtained. Rated filament voltage should be applied and the filament current checked to see if it agrees with the value marked on the anode water jacket. A reading in the order of 15 amperes below this value (or lower) indicates that one (or more) of the filament strands is open, assuming the filament voltmeter and ammeter are accurately calibrated. (The meters may be quickly checked by measuring the filament volts and amperes of some known good ML-5681's)

If there is any evidence of damage in transit, a "joint inspection" report should be prepared with the transportation company *within fifteen days.* The serial number identifying each individual tube appears on the grid terminal flange and on the outside of the packing case. It should be used in all correspondence concerning the tube.

Operation

After filament power has been on for one-half hour, apply approximately half rated plate voltage and operate the tube for an additional one-half hour. All tuning adjustments should be made during this period. Normal plate voltage may then be applied and final tune-up performed; the tube should be run at normal voltage and driving power for at least one-half hour. While the ML-5681 is operating at the desired normal output, it is suggested that the meter readings, control settings, and flow rates be recorded, especially when the tube is to be set aside as a spare. Then, in the event of an emergency tube change, the new tube can be installed and operation resumed with minimum delay.

As in the case of all large high-power vacuum tubes, no ML-5681 should remain in storage for more than three months. It should be operated in rotation with other ML-5681's, or aged every three months according to the above schedule given for newly received tubes. This procedure will keep it free from traces of gas, which may be liberated during prolonged storage, and insures that only operable tubes are carried in stock.

The glass in high-power vacuum tubes sometimes acquires a slight bluish fluorescence when subjected to high voltage. If this phenomenon is observed in an ML-5681, it should not be construed to mean that the tube is gassy. After proper aging, according to the above instructions, any fluorescence which persists is in no way detrimental to the satisfactory operation of the tube.

Tube Care

The glass insulation and other external parts of the ML-5681 should be kept free from accumulated dust to minimize sur-

face leakage and the possibility of arc-over. It is recommended that dust be wiped from the glass bulb and other external parts of the tube at least once a week. This should be done when the tube is cold, using a soft lint-free cloth moistened with alcohol.

All tube terminals and connectors must be kept bright and clean to provide good electrical contact. If they become discolored, they may be polished with fine emery cloth and then wiped clean.

When packed for shipment, the ML-5681 is sealed in a barrier bag which protects the tube from atmospheric moisture. In the case of export shipment, the barrier bag is a metalized type, which not only protects against moisture but also permits tube storage at temperatures ranging from −35°C to +55°C. Unless the barrier bag is re-heat-sealed before storing, the protection provided by the bag should be accomplished by some other means. Before placing the ML-5681 in storage, water should be completely drained from the integral water jacket to prevent freezing and corrosion in the passages. The ports should then be covered with a suitable material, such as pliofilm, to prevent the entry of foreign matter.

Filament Care

The thoriated-tungsten filament of the ML-5681 is the multistrand type and is designed for single-phase a-c operation. It provides greater electron emission with less power than conventional pure-tungsten filaments, but requires the observance of certain precautions. The filament should be operated at rated voltage ±5%. Regular operation at −5% from rated voltage, to increase tube life, is permissible when maximum power output is not used and the required peak emission does not exceed 50 amperes. Operation at lower filament voltage is not permissible. For standby periods up to two hours, however, the filament voltage may be lowered to 80% of normal; for longer periods the filament should be turned off. A suitable volt-meter should be permanently connected across the filament terminals directly at the tube so that the filament voltage will always be known.

Prolonged storage periods or overheating of the ML-5681 by severe overloads may liberate gas within the vacuum envelope which, even though minute, is sufficient to decrease the filament emission. The rectified grid current is a sensitive measure of loss of emission. The grid and plate currents should be particularly noted after an outage, as the filament may have been poisoned by the high-power surge. If these currents start to decrease, the power should be removed and the aging procedure instituted, as described in the first paragraph under "Operation".

The ML-5681 is equipped with a zirconium getter which will absorb free gas within the tube when heated with a current not to exceed 14 amperes, which may be drawn from the filament power through an appropriate dropping resistor (approximately 0.7 ohm). The getter terminals are shown on the outline drawing.

The tube (with getter connected) should be operated (a) with only filament voltage for one-half hour, (b) with half normal plate voltage for one-half hour, (c) increasing to full voltage in about one hour. The getter however is not designed for continuous operation at 14 amperes.

In some applications it may be desirable to operate the getter at reduced temperature for prolonged periods. For these applications the getter may be operated continuously at a current of 7 amperes by increasing the dropping resistor to approximately 1.0 ohms.

Should the tube become gassy due to prolonged inactivity or to flash arcing, the getter should be operated at 14 amperes for one-half hour.

The above aging period should only be considered a minimum. If behavior at rated conditions shows instability continued aging as above should be performed.

If the d-c grid and plate currents are still low, a filament reactivation cycle (with the getter disconnected) may be undertaken. This consists of operating the tube (a) with filament voltage at 20% above normal and no plate voltage for fifteen minutes, then (b) at rated filament voltage and half normal plate voltage for one-half hour. This procedure should be performed only in extreme cases.

Tube Reshipment

When packing the ML-5681 for reshipment, the water jacket should be free of water as noted above for storage. The tube and a container of desiccant must then be sealed in the same manner as in the initial shipment. It is imperative that all original packing material be installed properly so that the tube will not be subjected to undue shock or vibration during transit. The Service Report form supplied with each tube should be filled out and forwarded whenever the tube is to be returned to the factory.

EQUIPMENT DESIGN CONSIDERATIONS

Mechanical Installation

Mounting of the ML-5681 requires the Machlett mounting socket (shown on page 10) or equivalent, which has been installed to support the tube vertically, anode down. The tube should be placed in the socket and twisted clockwise, by the anode or grid flange, through approximately 60°; it is removed by the converse procedure. Suitable provision should be made to prevent water from spilling when the tube is removed. The mounted ML-5681 should not be subjected to shock or appreciable vibration.

Cooling Systems

The water cooling system generally consists of a source of anode cooling water, a feed-pipe system which carries water through flexible insulated hoses to and from the mounting socket, and provisions for interlocking the water flow with the power supplies. It is essential that the direction of water flow through the tube be upward over the anode surface (center connection), as shown on page 10. When the anode is at a high potential above ground, the feedpipe system must have sufficient insulation to reduce leakage current to a negligible value. The water system should be the closed type using distilled or deionized water to preclude the possibility of scale formation and corrosion, both of which can be expected with tap water. Scale restricts water flow and prevents proper transfer of heat from the anode to the cooling water, and corrosion may damage the elements and passages. The rates of scale formation and corrosion depend on the electrical conductivity of the water. To minimize the

formation of scale and corrosion, the use of a coolant having an initial resistance of at least 100,000 ohms per cubic centimeter is recommended. Since a very small amount of contamination can change the conductivity of distilled water, frequent measurement is desirable. The water should be changed when its resistance falls below 20,000 ohms per cubic centimeter. A filter should be placed in the water supply line to the tube to trap foreign particles likely to impair the flow. It is suggested that a filter with a 100-mesh screen (0.005″ openings) be used.

The water-cooling system must function properly at all times since even a momentary failure of flow will damage the ML-5681. Without cooling water, the heat of the filament alone is sufficient to cause serious harm. It is necessary to keep the water-flow interlocks in correct adjustment and never to set them to operate below the recommended level. The flow of water and air must start before the application of any tube voltages; it is recommended that the flow of coolants continue for 5 minutes after the removal of all tube voltages. In the event of emergency or fault conditions, however, the simultaneous shut down of all power will not damage the tube. Specific water-flow data are given in the Water-Cooling Characteristics, page 9. Under no circumstances should the outlet water temperature exceed 70°C nor should the temperature of the entering water be permitted to fall below 10°C with plate potential on. Water pressure at the tube socket should never exceed 75 psi.

Forced-air cooling of the cathode terminals, the grid flange, and the glass envelope is required, and the cooling should be uniformly distributed around the circumference of the seals. Air flow of 250 cfm provides adequate cooling up to 5 Mc; at higher frequencies more air flow is required, and uniform distribution of flow over the grid-anode seals is more critical. It is important to have the air passages carefully contoured so that the highest possible velocity of air is directed on the seals to be cooled. In the equipment design stage, it is recommended that temperature measurements be made of the glass-to-metal seals, electrode contact areas, and glass envelope of the tube under maximum operating conditions. In no case should any temperatures higher than 165°C be permitted, and the difference in temperature between any two points on the periphery of a seal should not be greater than 25°C. The temperature may be measured with temperature-sensitive paint such as Tempilaq*.

Electrical Considerations

Suitable meters should be provided for monitoring filament voltage, d-c plate voltage, plate current, and grid current. A tube-life recording meter should be installed to read total hours of filament operation. If tubes are used in parallel or push-pull, individual metering of grid and plate currents is highly recommended.

Electrode contact should be made only on the surfaces designated on the outline drawing. Connecting cables and other parts of the equipment must be kept away from the electric fields between terminals and from the glass insulation. This precaution is necessary to avoid corona discharge, which may result in puncture of the glass. Connectors must be designed to carry the radio-frequency currents to the tube electrodes without excessive heating of the contact areas between connectors and terminals (165°C maximum temperature). All connecting cables and/or spring fingers must be flexible so that no strain will be transmitted to the glass envelope.

Terminal connectors, shown on page 10, are recommended for operation of the ML-5681 at low or medium frequencies in conventional lumped-constant circuitry. For operation above 10 Mc, orientation of the ML-5681 with respect to other circuit elements must be such that the distribution of radio-frequency current at the tube terminals is uniform. Otherwise, the uneven heating and consequent unequal thermal expansion may strain the seals severely. Both cathode terminals must be thoroughly by-passed to radio-frequency currents to avoid excessive heating of the filament. When cavity circuitry is used, all connectors should be the spring-pressure type, making uniformly good electrical contact around the tube circumference.

The filament transformer must limit the inrush current to a maximum of 2.5 times normal filament current. If a suitable high-reactance filament transformer is not available, step resistors in the primary will be satisfactory for the purpose of limiting the surge current.

The tube and circuitry should be housed in a protective enclosure, interlocked so that personnel cannot possibly come in contact with high voltage. The interlock devices should break the primary circuits of the plate and grid supplies when any door on the protective enclosure is opened, and should prevent the closing of the primary circuits until the door is again locked.

The plate circuit should be equipped with a time-delay relay to prevent the application of plate voltage before the filament has attained normal operating temperature.

Fault Protection

The handling of very high power requires particular attention to the removal of power under fault conditions, since the large amount of energy involved can cause severe damage if not properly controlled. The ground lead of the plate circuit of each tube should be connected in series with the coil of a quick-acting overload relay, adjusted to open the circuit breakers in the primary of the rectifier transformer at slightly higher than normal plate current. The total time required for the operation of the relay and circuit breakers should be 1/10 second or less. The grid circuit should be equipped with similar overload relays which will likewise remove all grid power within 1/10 second.

To protect the tube until the relay and circuit breakers act, the installation of a device which will short circuit the plate power in the order of one-half cycle is highly recommended. For this purpose an electronic device or a railway-type line-shorting contactor may be connected to short the primary power lines to ground. Preferably, a gaseous conduction device may be connected at the output of the plate-supply filter to dissipate the filter-circuit energy as well as the rectifier output.

*Product of the Tempil Corporation, 132 West 22nd Street, New York 11, New York.

In some applications, depending on the size of the filter capacitor or speed of the relays, sufficient protection may be obtained by connecting a resistor in series with the plate lead of each tube, unless the equivalent impedance is provided by transformers or other circuit components. The criterion is the total energy to which the tube can be subjected. The minimum value of total resistance which alone will give adequate protection with reasonably low power loss is as follows:

Series Resistor	10	20	40	40-55 ohms
Maximum Power Output of Rectifier	120	280	640	1250 kW

In most cases, especially in parallel operation of tubes when power-supply impedance is low, both the electronic shorting device and the series resistor are recommended.

When such an electronic device is not installed, protective sphere gaps used in combination with the series plate resistor may be satisfactory. Appropriately designed gaps are shown in conjunction with the connectors on page 10. When the ML-5681 is used in resonant-cavity circuitry, equivalent protective gaps should be integrated within the cavity at approximately the same distances from the tube as those shown in the drawing on page 10. Gap spacings must be carefully adjusted for each individual application.

MAXIMUM RATINGS AND TYPICAL OPERATING CONDITIONS

Maximum ratings for the ML-5681 given in the tabulated data are limiting values which, if exceeded, may reduce the life and performance of the tube. When designing circuitry, therefore, it is necessary to insure that the maximum ratings will not be exceeded under any conditions, even for short periods of time. The equipment engineer must make allowances for any unusual condition of supply-voltage fluctuation or load variation, and for manufacturing tolerances in the equipment itself. (See Characteristic Range Values for Equipment Design.)

An approximate value of plate dissipation, which should not exceed the value shown under Maximum Ratings for each class of service, may be calculated from the water flow conditions by the following equation:

$$P = \frac{n\ (t_o - t_i)}{4} \text{ kilowatts}$$

where t_o and t_i are the outlet and inlet water temperatures, respectively, in degrees Centigrade measured near the tube socket, and n is the flow in gallons per minute. It should be noted, however, that n for a given plate dissipation must never be permitted to drop lower than the value shown in the Water Cooling Characteristics.

The typical operating conditions given in the tabulated data on pages 2 and 3 do not include the effects of electron transit time or circuit losses, hence, useful power output to the load will be less than that indicated, depending on the frequency of operation and circuit efficiency. At frequencies above 10 Mc, transit time effects will reduce power output to approximately the following proportions of the tabulated values: 97% at 30 Mc; 90% at 70 Mc; and 83% at 110 Mc. The useful power output can be calculated by subtracting the transit-time and circuit losses from the tube power output values shown in the tabulated data.

In the initial operation of new circuitry, or when adjustments are made, parasitic modes of oscillation may be excited, causing excessive voltages at the tube electrodes. Therefore, approximately one-half rated plate voltage should be used to avert damage to the tube and associated apparatus. Operation at reduced power is essential until all parasitic effects are eliminated or phased out. After correct adjustments have been made and the ML-5681 is operating stably within all ratings, the plate voltage may be raised in steps to the desired value.

In Class B Modulation or other audio-frequency service, the ML-5681 should be operated with grid bias obtained from a d-c voltage source of good regulation. Each grid circuit should be equipped with a separate bias adjustment to balance the grid and plate currents.

In Class C Plate-Modulated R-F Amplifier service, the ML-5681 should be supplied with bias from the grid resistor or from a suitable combination of grid resistor and fixed supply. The combination grid-resistor and fixed-supply method has the advantage of protecting the tube through loss of excitation and of minimizing distortion by bias-supply voltage compensation.

In Class C R-F Telegraphy, the ML-5681 should be supplied with bias obtained from a fixed supply for amplifier service, or from an adjustable grid resistor for oscillator service. Variation of d-c grid current between individual tubes requires provision for adjustment of the grid resistor to obtain the desired total bias for each tube.

In grid-drive circuits, the grid current and driving power for the desired power output will vary with the plate loading. If the plate-circuit resistance is low, the desired output can be obtained with relatively low grid current and driving power, but plate efficiency is sacrificed. Conversely, if the tube operates into a relatively high load resistance, higher grid current and driving power are required, and the plate-circuit efficiency will be increased. It is customary to make a compromise between these extremes; the typical operating conditions shown are designed to give good plate-circuit efficiency with reasonable driving power. The driver stage should have more output capability than shown in the tabulated data to account for circuit losses and variations in tubes as shown in the Characteristic Range Values for Equipment Design.

In cathode-drive circuits, the required driving power is increased since the driving voltage and the developed r-f plate voltage act in series to supply the load. This additional driving power reappears as part of the output to the load. The power output increases as the driving voltage and grid current are increased, whereas the grid-drive circuit saturates above a critical value of driving voltage and current. Saturation of a cathode-drive stage must not be attempted because the rated maximum grid current may easily be exceeded.

The above discussion presents information necessary to obtain satisfactory and economical performance of the ML-5681 under normal operating conditions. For information concerning specific tube problems or applications not covered, consult the Machlett Engineering Department.

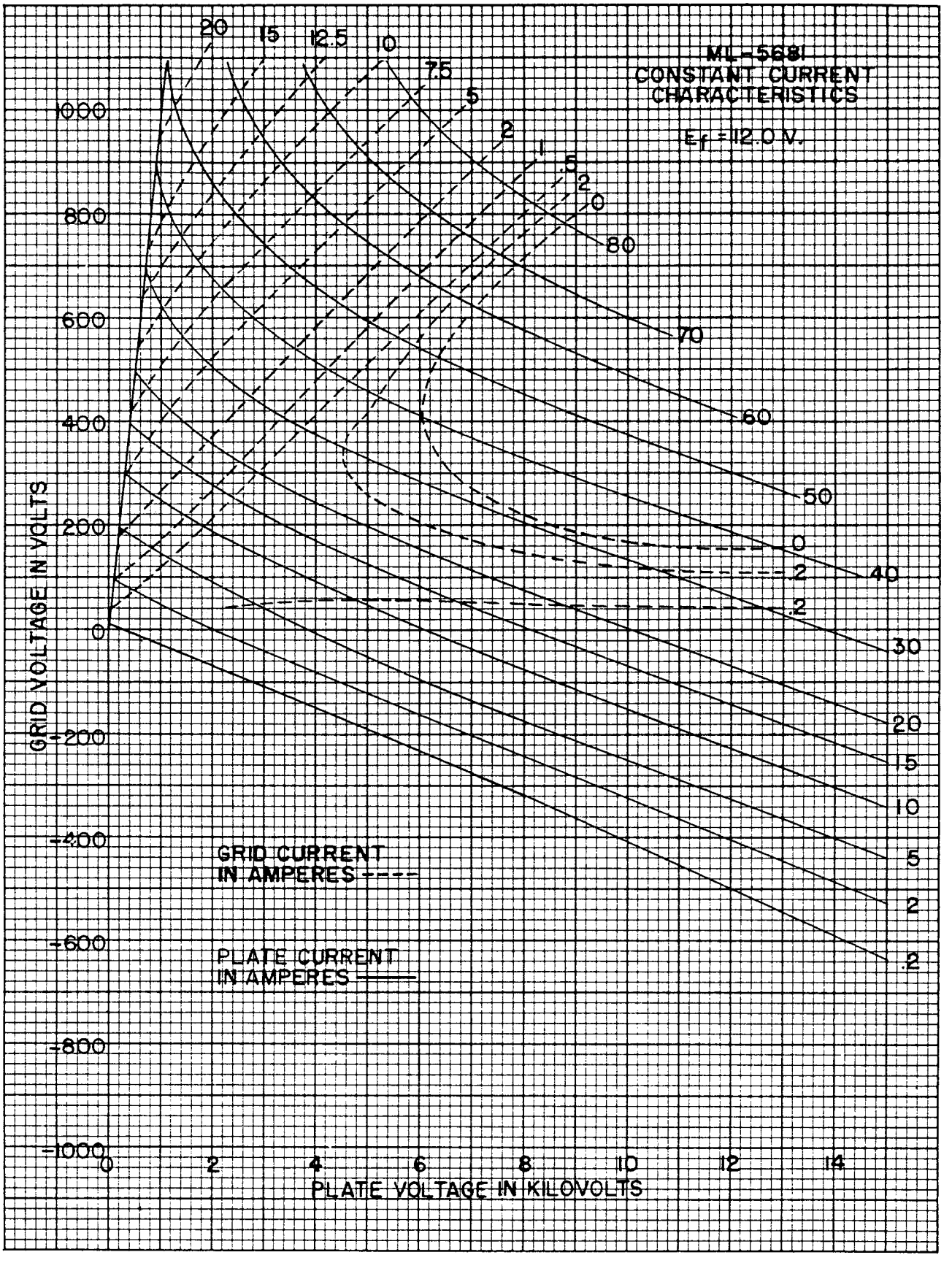
ML-5681
CONSTANT CURRENT
CHARACTERISTICS
Ef = 12.0 V.
GRID VOLTAGE IN VOLTS
PLATE VOLTAGE IN KILOVOLTS
GRID CURRENT
IN AMPERES ----
PLATE CURRENT
IN AMPERES ——
1000
800
600
400
200
0
-200
-400
-600
-800
-1000
0
2
4
6
8
10
12
14
20
15
12.5
10
7.5
5
2
1
.5
.2
0
80
70
60
50
40
30
20
15
10
5
2
.2
0
2
.2

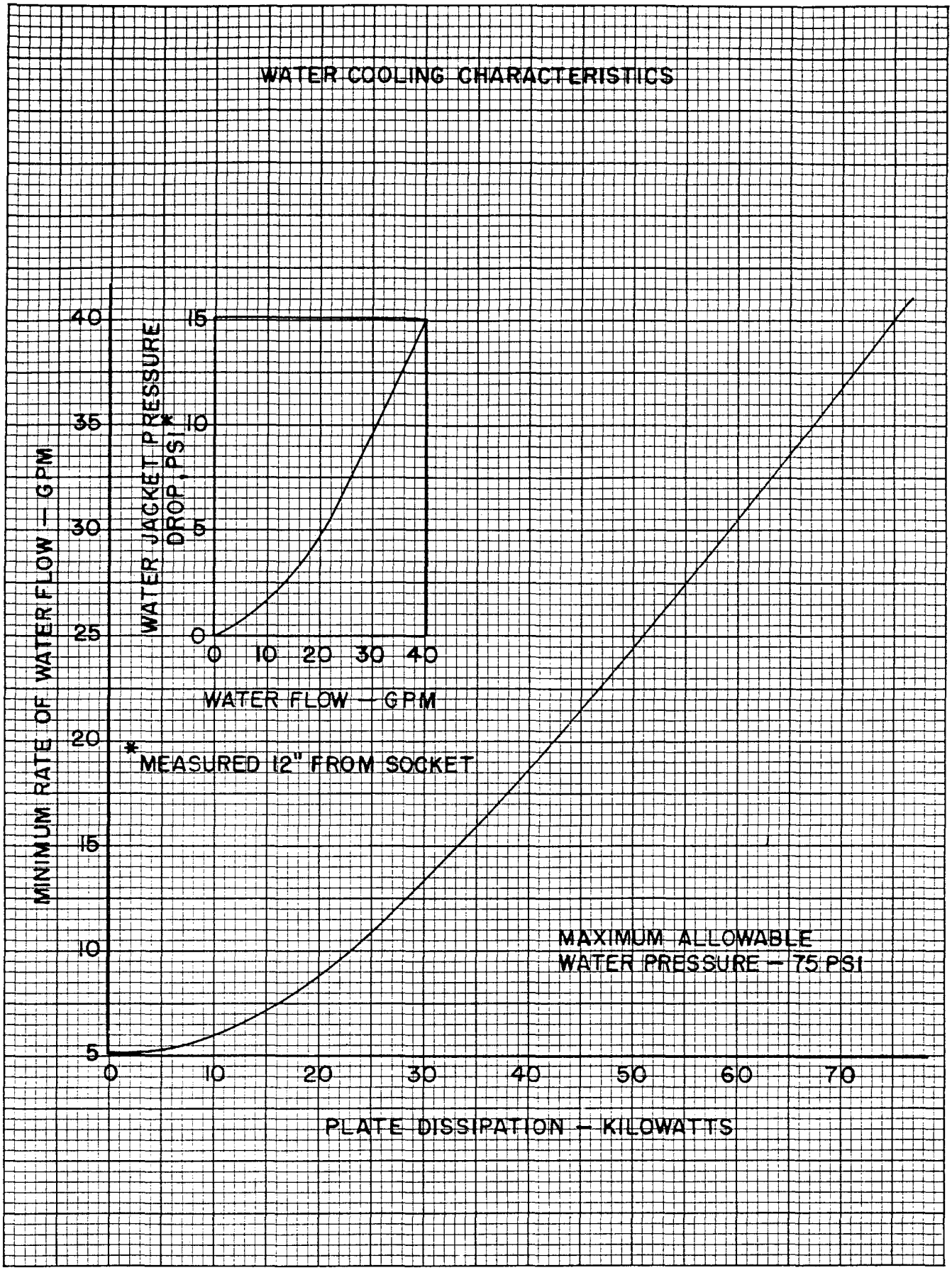
WATER COOLING CHARACTERISTICS
MINIMUM RATE OF WATER FLOW — GPM
40
35
30
25
20
15
10
5
0
10
20
30
40
50
60
70
PLATE DISSIPATION — KILOWATTS
MAXIMUM ALLOWABLE
WATER PRESSURE — 75 PSI
WATER JACKET PRESSURE
DROP, PSI*
15
10
5
0
0
10
20
30
40
WATER FLOW — GPM
*MEASURED 12" FROM SOCKET

ML-5681 & ML-5682
COOLING SYSTEM & PROTECTIVE GAP ARRANGEMENT

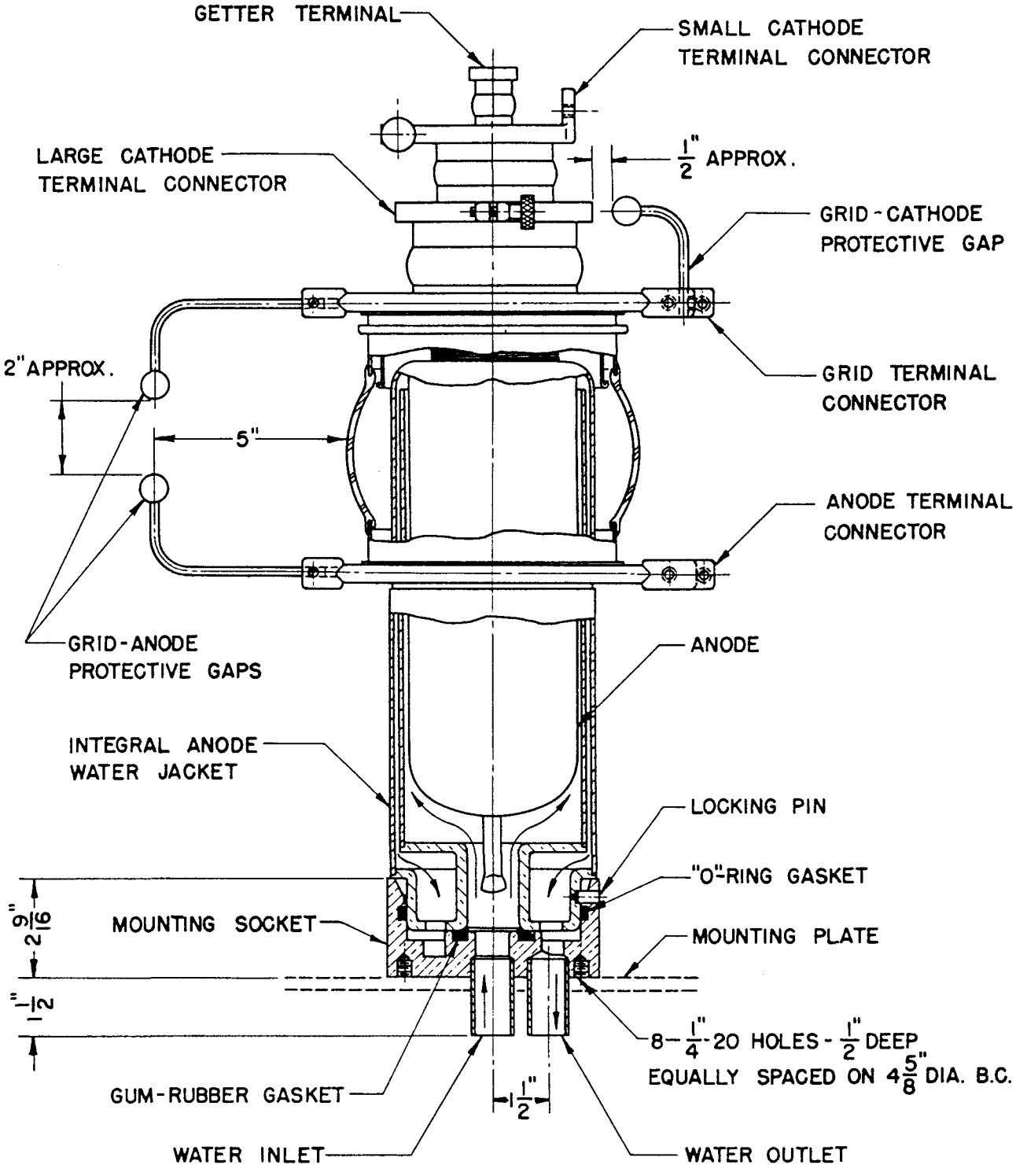

OUTLINE OF ML-5681

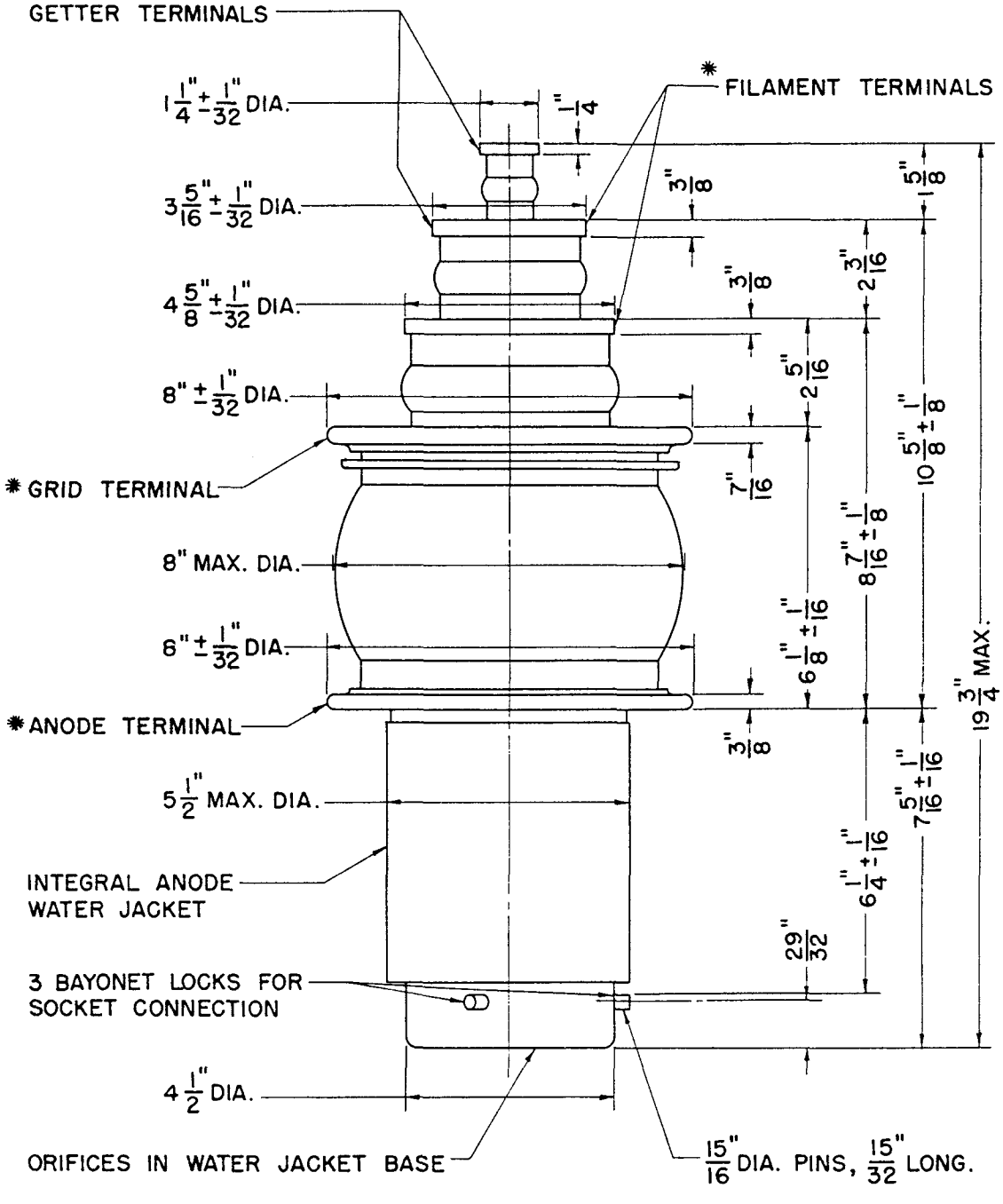

* ELECTRICAL CONTACTS TO BE MADE ON THE PERIPHERY OF THESE TERMINALS.

RAYTHEON
THE MACHLETT LABORATORIES, INC.
A SUBSIDIARY OF RAYTHEON COMPANY

Printed in U.S.A.
ST-1030 2.5M 8-62