SYLVANIA

engineering data service

SYLVANIA
5675

MECHANICAL DATA

Maximum Overall Length	2.043 Inches
Maximum Overall Diameter	.814 Inches
Mounting Position	Any

ELECTRICAL DATA

HEATER CHARACTERISTICS

Heater Voltage (AC or DC)	6.3 Volts
Heater Current	135 Ma

DIRECT INTERELECTRODE CAPACITANCES

Grid to Plate	1.3 $\mu\mu$f Avg.
Grid to Cathode	2.3 $\mu\mu$f Avg.
Plate to Cathode	.090 $\mu\mu$f Max.

RATINGS (Absolute Values)

Plate Dissipation	5 Watts Max.
Plate Voltage	165 Volts Max.
Plate Current	31 Ma Max.
Seal Temperature	175° C Max.

CHARACTERISTICS

Conditions (E_b=135, R_k=68 ohms)

Transconductance	6400 μmhos
Amplification Factor	20

TYPICAL OPERATING CONDITIONS

UHF Oscillator, CW — 1700 MC

Plate Voltage	120 Volts
Grid Resistor	Adjust for 25 Ma Plate Current
Operating Frequency	1700 Mc
Power Output (minimum)	300 MW

APPLICATION DATA

The double ended construction of the Sylvania Type 5675 makes this tube especially attractive for use in coaxial type cavities at frequencies up to 3000 mc. The mechanical configuration also lends itself readily to lumped-constant and butterfly circuitry. However, coaxial cavities are recommended for operation above 1000 mc.

QUICK REFERENCE DATA

The Sylvania Type 5675 is a medium mu pencil triode designed for service as a cw oscillator, frequency multiplier or grounded grid amplifier at frequencies up to 3000 mc.

The mechanical configuration is particularly adaptable to grounded grid circuitry.

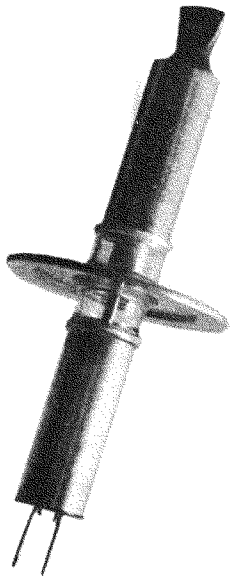

SYLVANIA ELECTRIC PRODUCTS INC.

ELECTRONICS DIVISION
WOBURN, MASS.

Prepared and Released By The TECHNICAL PUBLICATIONS SECTION EMPORIUM, PENNSYLVANIA

12-53-59
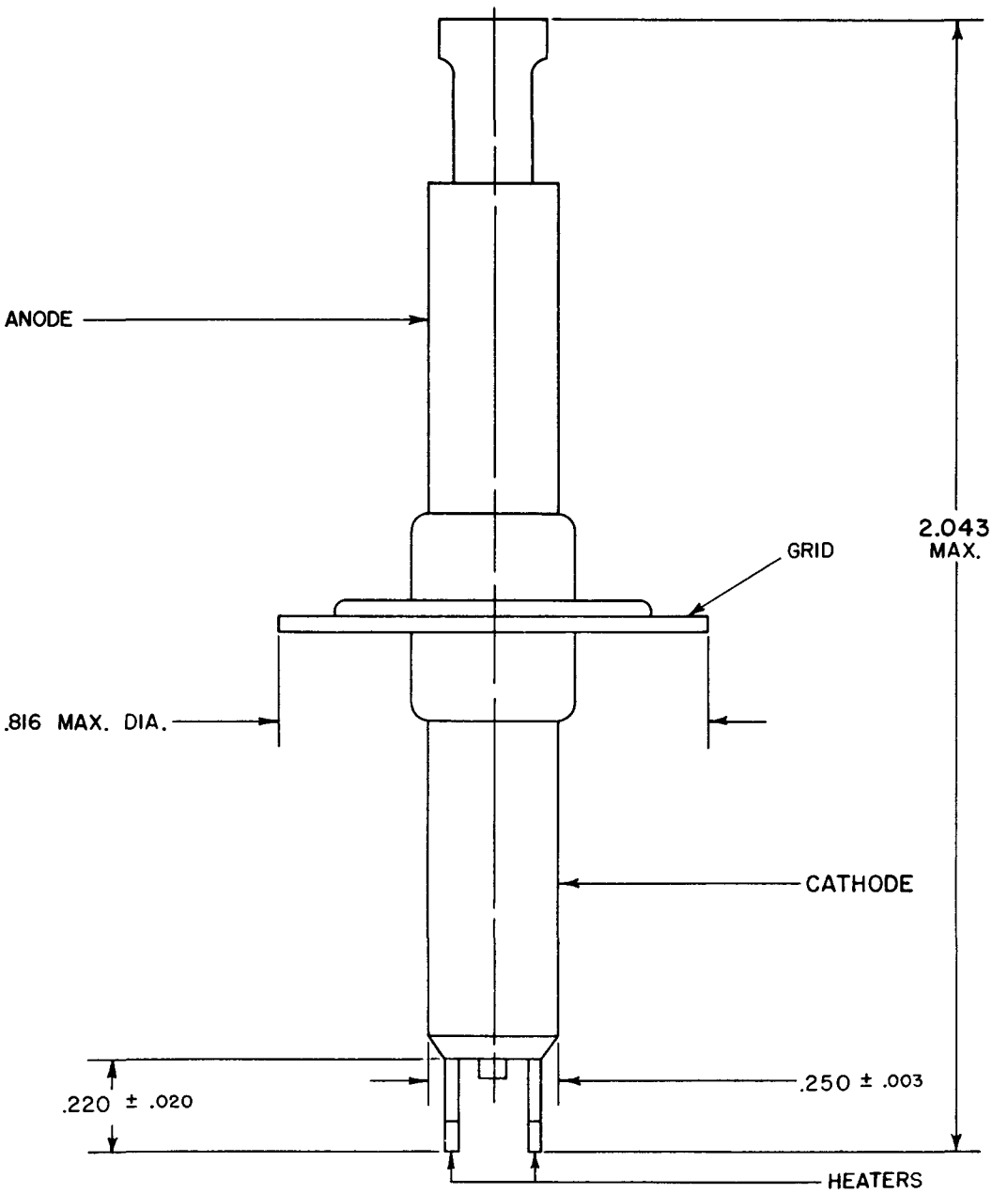
OUTLINE DRAWING