from RMA release # 598,
Aug. 22, 1947

5655

IMAGE ORTHICON

Tentative Data

The 5655 is a television camera tube recommended for studio use. It is similar to type 2P23 but differs in that its photocathode has practically no infrared response, its resolution is somewhat better, its signal-to-noise ratio has been improved about twice, and its response to half tones is more natural. It does not, however, cover as wide a light range as the 2P23.

DATA

General:

Heater, for Unipotential Cathode:		
Voltage (AC or DC)	6.3 ± 10%	Volts
Current	0.6	Ampere
Direct Interelectrode Capacitance:		
Anode to All Other Electrodes	20	μμf
Photocathode Response	See accompanying curve	
Image Size (4 x 3 aspect ratio)	1.6" Diagonal	
Focusing Method	Magnetic	
Deflection Method	Magnetic	
Overall Length	15-1/4" ± 1/4"	
Greatest Diameter of Bulb	3" ± 1/16"	
Shoulder Base	Keyed Jumbo Annular 7-Pin	
End Base	Small-Shell Diheptal 14-Pin	

Mounting Position: Never in a vertical position with the diheptal-base end up nor in any other position where the axis of the tube with base up makes an angle of less than 20° with the vertical through the center of the base.

Minimum Deflecting-Coil Inside Diameter	2-1/8"
Deflecting-Coil Length	5"
Focusing-Coil Length	10"
Alignment-Coil Length	15/16"
Photocathode Distance Inside End of Focusing Coil	1/2"

Maximum Ratings, Absolute Values:

PHOTOCATHODE VOLTAGE	-550 max.	Volts
PHOTOCATHODE ILLUMINATION	50 max.	Foot-Candles
AMBIENT TEMPERATURE	50 max.	°C
GRID-No.6 VOLTAGE	-550 max.	Volts
TARGET VOLTAGE:		
Positive Value	50 max.	Volts
Negative Value	50 max.	Volts
GRID-No.5 VOLTAGE	150 max.	Volts
GRID-No.4 VOLTAGE	300 max.	Volts
GRID-No.3 VOLTAGE	400 max.	Volts
GRID-No.2 & DYNODE-No.1 VOLTAGE	350 max.	Volts

Copyright, 1947
Radio Corporation of America

GRID-No.1 VOLTAGE:		
Negative Bias Value	125 max.	Volts
Positive Bias Value	0 max.	Volts
PEAK HEATER-CATHODE VOLTAGE:		
Heater negative with respect to cathode	125 max.	Volts
Heater positive with respect to cathode	10 max.	Volts
ANODE-SUPPLY VOLTAGE #	1500 max.	Volts
VOLTAGE PER MULTIPLIER STAGE.	350 max.	Volts
ANODE CURRENT	100 max.	Microamp.

Typical Operation:

Photocathode Voltage (Image Focus).	-300 to -500	Volts
Grid-No.6 Voltage (Accelerator)— 80% of photocathode voltage	-240 to -400	Volts
Target Voltage °	0	Volts
Grid-No.5 Voltage (Decelerator)°°	0 to 100	Volts
Grid-No.4 Voltage (Beam Focus)	160 to 240	Volts
Grid-No.3 Voltage ##	225 to 330	Volts
Grid-No.2 & Dynode-No.1 Voltage	300	Volts
Grid-No.1 Voltage (For Picture Cutoff).	-35 to -90	Volts
Dynode-No.2 Voltage	600	Volts
Dynode-No.3 Voltage	800	Volts
Dynode-No.4 Voltage	1000	Volts
Dynode-No.5 Voltage	1200	Volts
Anode Voltage	1250	Volts
Target Temperature Range.	35 to 45	°C
Ratio of Peak-to-Peak Highlight Video Signal Current to RMS Noise Current (Approx.)	70	
Minimum Peak-to-Peak Blanking Voltage	10	Volts
Field Strength at Center of Focusing Coil	75	Gausses
Focusing-Coil Current (Approx., for coil listed below)	75	Ma
Deflecting-Coil Current (Approx., for assembly listed below):		
Horizontal (Peak to Peak)	625	Ma
Vertical (Peak to Peak)	290	Ma
Alignment-Coil Current (Approx., for coil listed below)	0 to 30	Ma

Components:

Deflecting-Coil Assembly.	RCA Type No.201D75
Focusing-Coil Assembly.	RCA Type No.202D75
Alignment-Coil Assembly	RCA Type No.204D75

Ratio of dynode voltages is shown under Typical Operation.

° Adjustable within ±3 volts of indicated value with blanking voltage off.

°° Taps at 0, 30, 60, and 90 volts are recommended. Set at voltage giving most uniform resolution over entire picture area.

Adjust to give the most uniformly shaded picture near maximum signal.

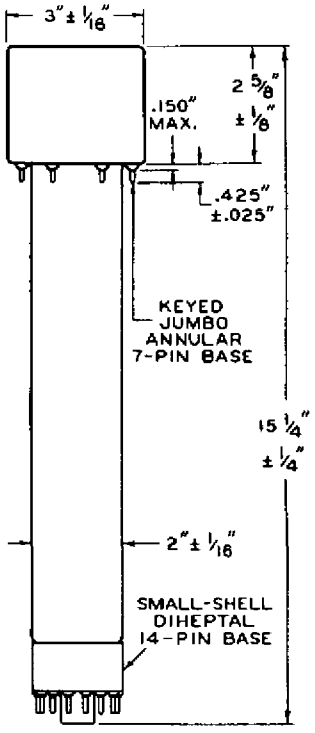

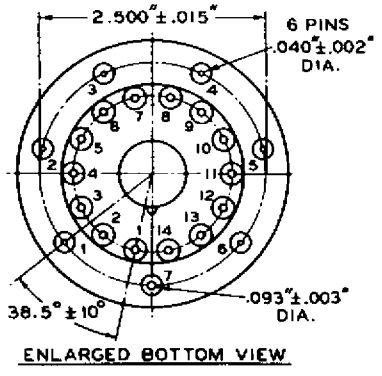

ENLARGED BOTTOM VIEW

DETAIL OF BOTTOM VIEW OF KEYED JUMBO ANNULAR BASE

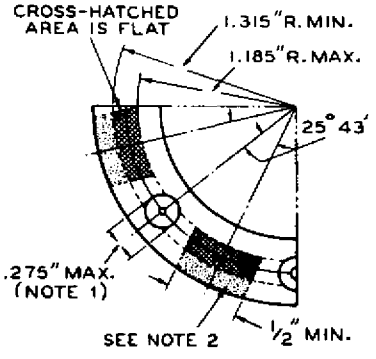

NOTE 1: Measured at distance of 1/32" below bottom of annular base.

NOTE 2: Dotted area is flat or extends toward diheptal-base end of tube by 0.060" max.

SOCKET CONNECTIONS

Bottom View

DIRECTION OF LIGHT: PERPENDICULAR TO LARGE END OF TUBE

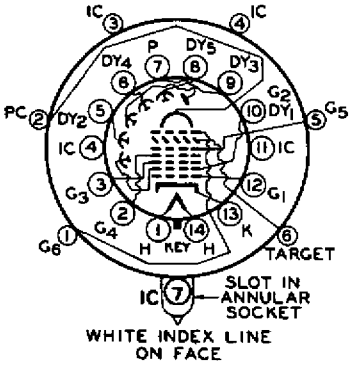

SMALL-SHELL DIHEPTAL 14-PIN BASE

Pin 1: Heater	Pin 9: Dynode No.3
Pin 2: Grid No.4	Pin 10: Dynode No.1, Grid No.2
Pin 3: Grid No.3	Pin 11: Internal Connection - Do Not Use
Pin 4: Internal Connection - Do Not Use	Pin 12: Grid No.1
Pin 5: Dynode No.2	Pin 13: Cathode
Pin 6: Dynode No.4	Pin 14: Heater
Pin 7: Anode	
Pin 8: Dynode No.5	

KEYED JUMBO ANNULAR 7-PIN BASE

Pin 1: Grid No.6	Pin 5: Grid No.5
Pin 2: Photocathode	Pin 6: Target
Pin 3: Internal Connection - Do Not Use	Pin 7: Internal Connection - Do Not Use
Pin 4: Internal Connection - Do Not Use	
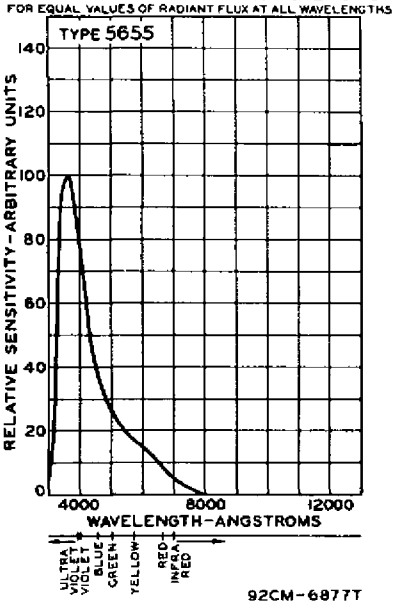
SPECTRAL SENSITIVITY CHARACTERISTIC
FOR EQUAL VALUES OF RADIANT FLUX AT ALL WAVELENGTHS