ADVANCE ELECTRON TUBE DATA SHEET

WESTERN ELECTRIC 5591* ELECTRON TUBE

5591
MINIATURE PENTODE UHF

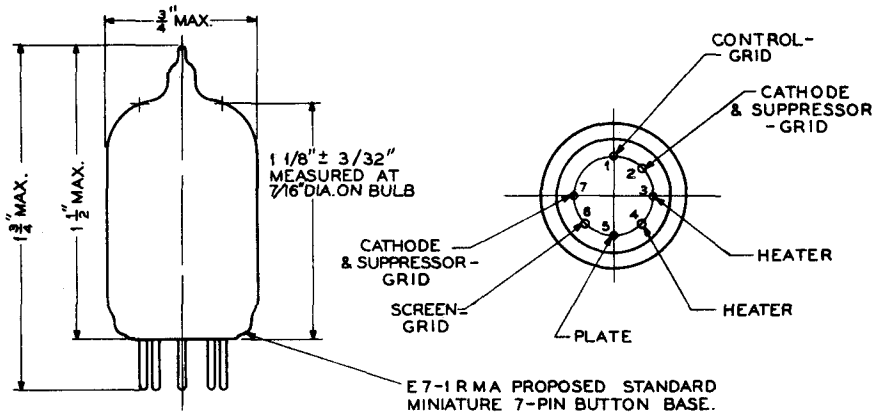

CLASSIFICATION

Miniature Pentode

MOUNTING

The tube may be mounted in any position

MAXIMUM RATINGS (DESIGN - CENTER VALUES)

Plate Voltage	180	Volts
Plate Dissipation	1.7	Watts
Screen Voltage	140	Volts
Screen Dissipation	0.5	Watts
Cathode Current	18	Milliamperes
Heater - Cathode Voltage	90	Volts
Bulb Temperature	120°	Centigrade

OPERATING CONDITIONS AND CHARACTERISTICS

Heater Voltage	6.3	6.3	6.3	Volts
Heater Current	0.150	0.150	0.150	Ampere
Plate Voltage	120	150	180	Volts
Screen Voltage	120	140	120	Volts
Cathode-bias resistor	200	330	200	Ohms
Plate Current	7.5	7.0	7.7	Milliamperes
Screen Current	2.5	2.2	2.4	Milliamperes
Amplification Factor	1700	1800	3500	
Plate Resistance	0.34	0.42	0.69	Megohm
Transconductance	5000	4300	5100	Micromhos

INTERELECTRODE CAPACITANCE (WITH JAN 1A NO. 314 SHIELD CONNECTED TO CATHODE)

Control - Grid to Heater, Cathode, Screen - Grid and Suppressor-Grid	3.90	uuf
Plate to Control-Grid	0.01	uuf
Plate to Heater, Cathode, Screen-Grid and Suppressor-Grid	2.85	uuf

ISSUE 1 1-2-47

PRINTED IN U.S.A.

* 5591/403B

Western Electric