RF AMPLIFIER PENTODE 5590

401 A

Especially designed for use at low supply voltages. At a Plate and Grid No 2 voltage of only 45 volts the transconductance is 1900 micromhos at a grid bias of approx. —1.5 volt. Operation range extends from low to very high frequencies.

COLD CAPACITANCES (external shield connected to cathode)

Grid No 1 to Plate	max. .02	$\mu\mu$F
Input	3.4	$\mu\mu$F
Output	2.9	$\mu\mu$F

ABSOLUTE MAXIMUM RATINGS

Plate Voltage	200	volts
Grid No 2 Voltage	155	volts
Grid No 1 Voltage, positive value	+ 5	volts
Grid No 1 Voltage, negative value	— 50	volts
Cathode Current	20	ma
Plate Dissipation	1.85	watts
Grid No 2 Dissipation (see Section A)	.55	watt
Heater — Cathode Voltage	100	volts
Bulb Temperature, at hottest point	150	°C
Grid No 1 Circuit Resistance		
with fixed bias	1.0	Mohm
with cathode bias	2.0	Mohms

MECHANICAL DATA

Base: Small Button Miniature 7-pin, RETMA E7-1
Bulb: EIA T 5½
Mounting Position: Any

PIN NO.	CONNECTED TO
1.	Grid No 1
2.	Cathode, Grid No 3, Int. Shield
3.	Heater
4.	Heater
5.	Plate
6.	Grid No 2
7.	Cathode, Grid No 3, Int. Shield

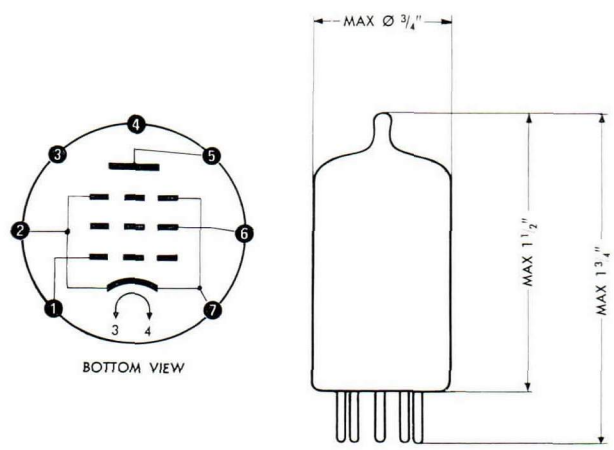

5590 / 401 A RF AMPLIFIER PENTODE

Ericsson LM

TYPICAL OPERATION. CLASS A_1

Heater Voltage	6.3	6.3	6.3	volts
Heater Current	.15	.15	.15	amp
Plate Supply Voltage	45	90	120	volts
Grid No 2 Supply Voltage	45	90	120	volts
Cathode Bias Resistor	390	820	1000	ohms
Plate Current	2.7	3.9	5.0	ma
Grid No 2 Current	.8	1.2	1.5	ma
Transconductance	1900	2000	2200	μmhos
Plate Resistance	.3	.45	.5	Mohm
Grid No 1 Voltage for Plate Current = 10 μa	— 5	— 10	— 14	volts

OPERATION RANGE VALUES

Heater Voltage		6.3		volts
Plate Supply Voltage		90		volts
Grid No 2 Supply Voltage		90		volts
Cathode Bias Resistor		820		ohms
	MIN	AVE	MAX	
Heater Current	135	150	165	ma
Plate Current	2.5	3.9	5.5	ma
Grid No 2 Current		1.2	2.0	ma
Transconductance	1500	2000	2500	μmhos
Transconductance, End of Life Point	1300			μmhos
I_{hk} at $E_{hk} = \pm 100$ volts			20	μa
Grid No 1 Current			–.1	μa
Cutoff Plate Current at $E_{c1} = -15$ volts			50	μa
Vibration Output		10		mv
Measured at 2.5 g and 25 cps. $E_f = 6.3$ v, $E_{bb} = 90$ v, $E_{cc2} = 90$ v, $R_k = 820$ ohms, $C_k = 2000$ μF, $r_p = 2000$ ohms.				

Edition 1

RF AMPLIFIER PENTODE 5590

401 A
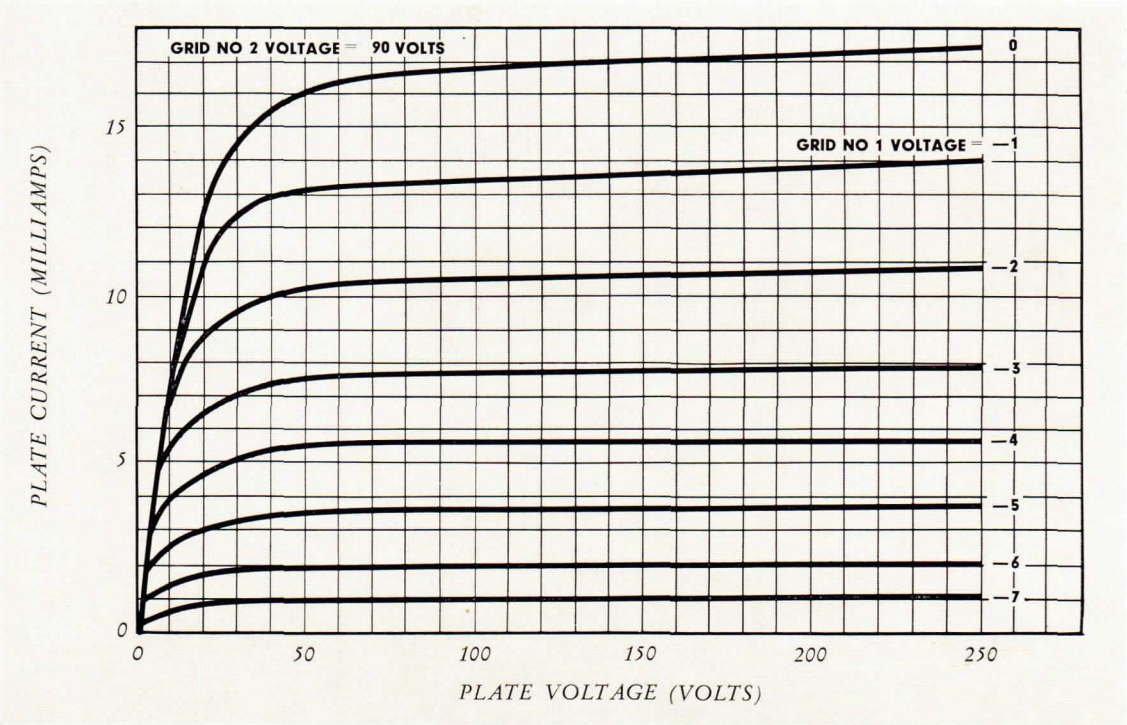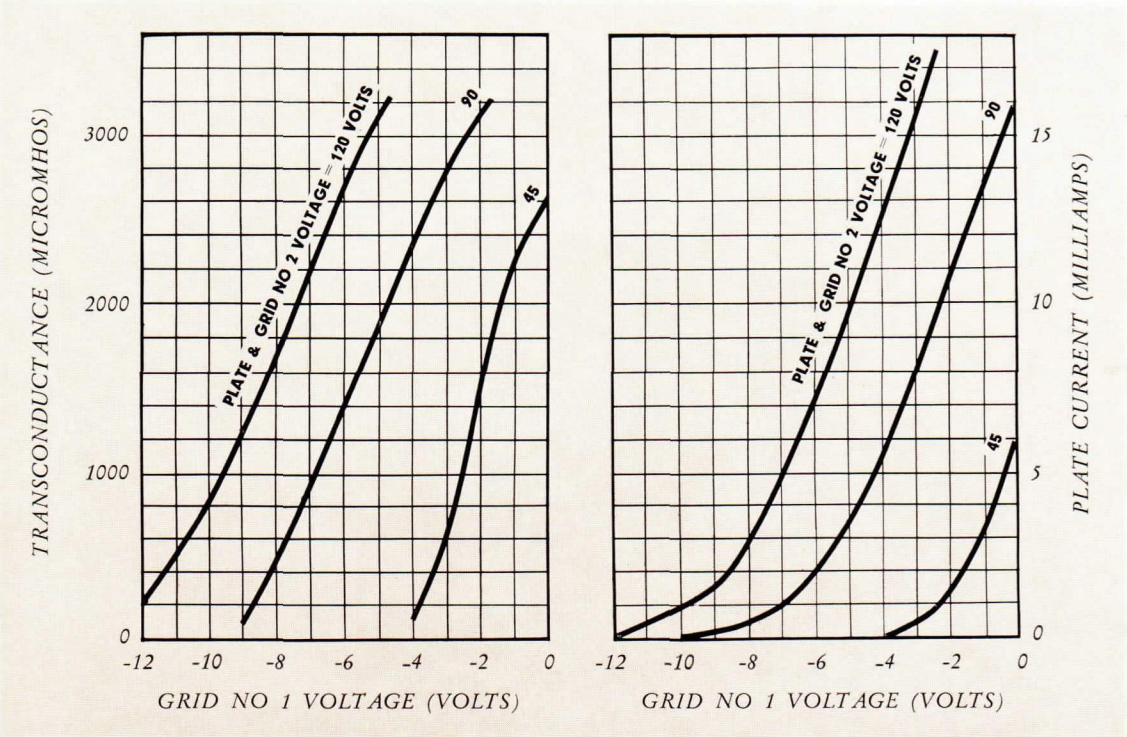
AVERAGE CHARACTERISTICS