WESTINGHOUSE

RMA Release 640

X-RAY TUBE DATA SHEET

February 25, 1948

Electron Tube Type 5536

GENERAL

Electrical Data		
Filament Current Range	3.5 to 5.5	Amperes
Filament Voltage Range	3.5 to 10	Volts
Mechanical Data		
Type of Cooling	Air	
Focal Spot Size		
Projected length	2.1	mm
Width	2.1	mm
Base Description	G2-2	
Maximum Overall Dimensions	16-3/8 x 3-13/16	Inches
Outline Drawing Number	5536	
Mounting Position	Any	

MAXIMUM RATINGS

Heat Capacity	270,000	*Heat units
Continuous Rating	15,000	Heat units per minute
Maximum Fluoroscopic Rating at a Loading of 425 (KV x MA)**	20	Minutes

	Full Wave	Half Wave	Self-rectified Inverse	Self-rectified Useful	Units
Peak plate voltage	100	100	100	90	Kilovolts
Value of D-C average current at maximum voltage rating	68	45	-	34	Milliamps.
Allowable time of operation under above conditions	1/20	1/20	-	1/20	Second

Table of short-time ratings which are given as the product of peak kv useful times D-C average milliamperes.

Time	Full Wave	Half Wave	Self-rectified
0.1 Sec.	6200	4225	2940
1 "	4800	3400	2575
5 "	3920	2875	2310
30 "	3020	2250	1970

*Heat units are defined as the product of the peak voltage in kilovolts, D-C average current in milliamperes, and the exposure time in seconds, and is proportional to energy.

** KV x MA is defined as the product of Peak KV times D-C average MA and is proportional to power.
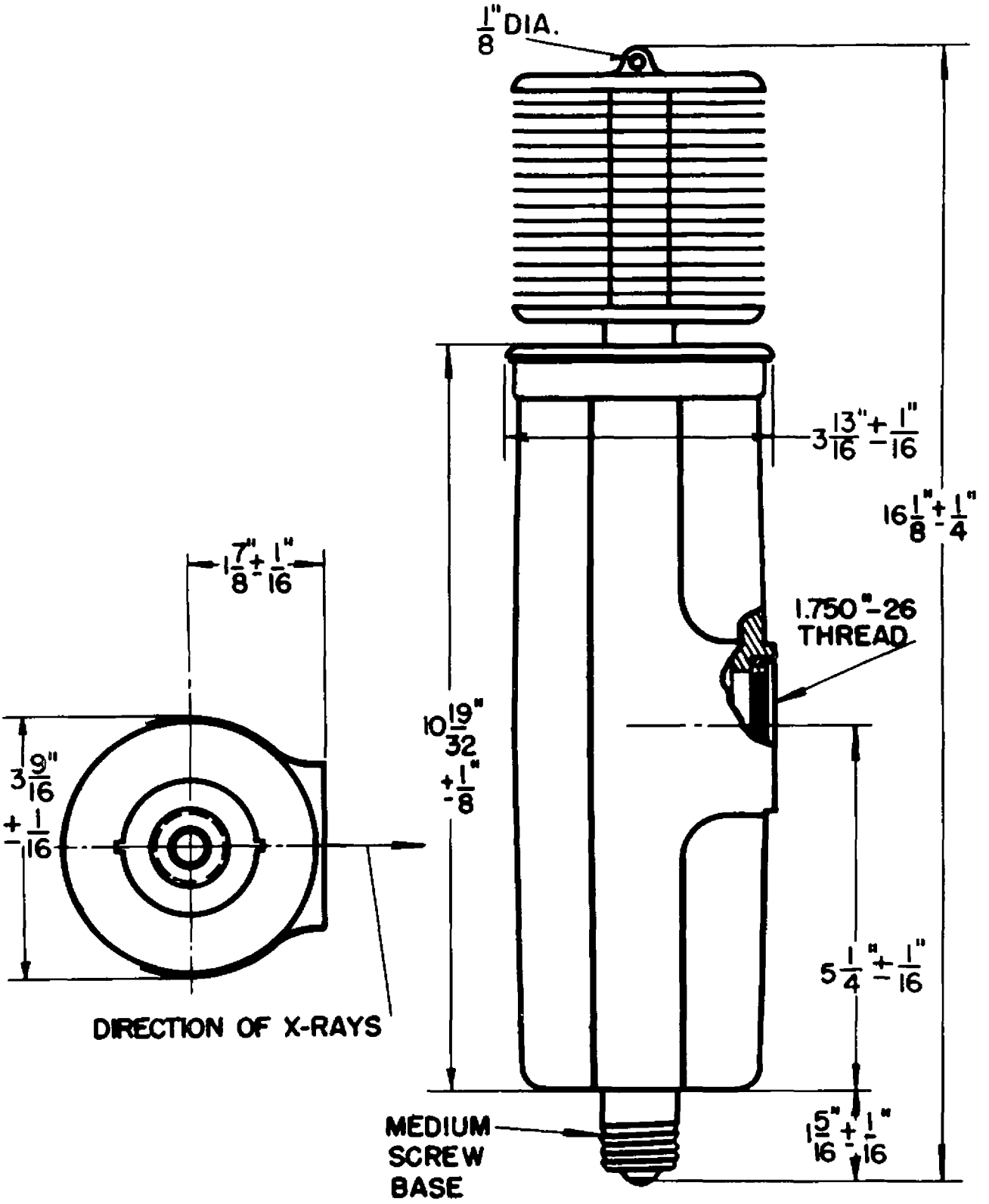
RMA TYPES 5536, 5537, 5538