SECURITY CLASSIFICATION
Unclassified

Reservation No. 5528 Registration No.
Reservation Date Aug. 20, 1946 Registration Date

TYPE 5528

THYRATRON

GENERAL CHARACTERISTICS

(a) Xenon-filled
(b) 1 control grid

ELECTRICAL

(c) Filament or Cathode	Oxide coated	
Voltage	2.5	Volts
Current	21	Amps.
Heating Time	60	Sec.
Approximate Tube Voltage Drop	12	Volts
Approximate Deionization Time	*	
(g) Grid Characteristics with all returns to center tap.		
Critical Grid Voltage at rated voltage	-2	Volts
" " " " " " 100 volts	-.5	Volts
Critical Anode Voltage at +3 volts	75	Volts

MECHANICAL

(d) Type of cooling	Convection	
(e) Temperature Limits	-50 to +70	
Mounting position	Upright, base down	
(f) Base	See drawing	
(f) Cap	See drawing	
(f) Base Connections	See drawing	
(i) Maximum Overall Dimensions		
Length	9½	IN.
Diameter	2.1	IN.

MAXIMUM RATINGS

Peak Inverse Voltage	500	Volts
Peak Forward Voltage	350	Volts
Peak Anode Current	77	Amps.
Average Anode Current	6.4	Amps.
Averaging Time for Anode Current	15	Sec.

Sponsor CONTINENTAL ELECTRIC COMPANY
Date September 16, 1946 By John H. Hutchings

*Operation should be satisfactory in a half-wave, grid controlled rectifier test at 125 vac, 2800 cps, 5 amps d.c., resistance load.

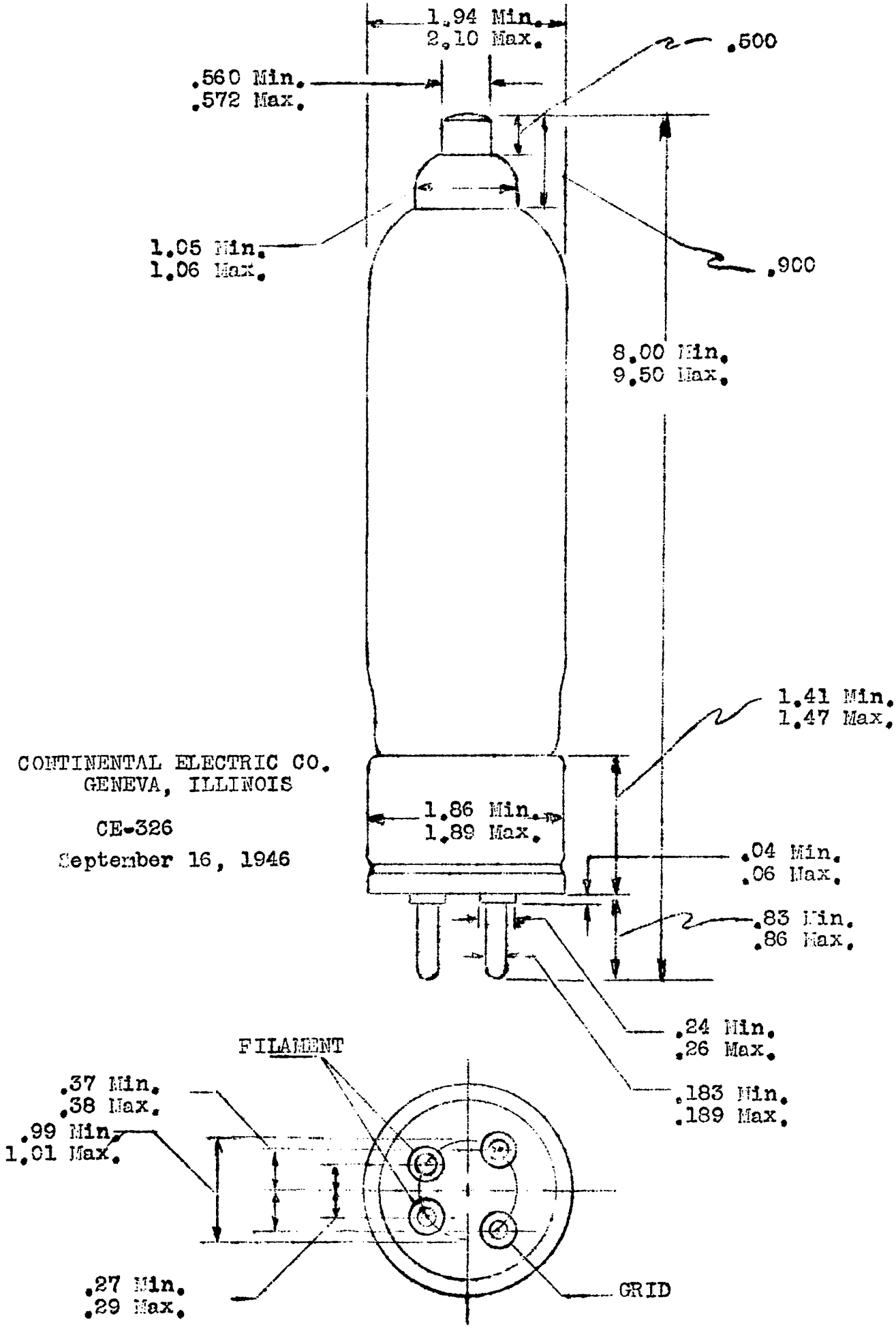
1.94 Min.
2.10 Max.
.500
.560 Min.
.572 Max.
1.05 Min.
1.06 Max.
.900
8.00 Min.
9.50 Max.
1.41 Min.
1.47 Max.
CONTINENTAL ELECTRIC CO.
GENEVA, ILLINOIS
CE-326
September 16, 1946
1.86 Min.
1.89 Max.
.04 Min.
.06 Max.
.83 Min.
.86 Max.
.24 Min.
.26 Max.
.183 Min.
.189 Max.
FILAMENT
.37 Min.
.38 Max.
.99 Min.
1.01 Max.
.27 Min.
.29 Max.
GRID