TYPE CK5517

The CK5517 is an instant starting, cold cathode, gas-filled, half-wave rectifier of miniature construction, suitable for high voltage low current power supplies up to 12 ma. output. Several tubes can be operated in cascade to produce very high voltages. The tube features small size, and a starter electrode which enables it to fire at reduced ignition voltage. The CK5517 should be used as a replacement for the former type CK1013 in equipment having load currents from 3 to 12 ma. For equipment having average load currents less than 3 ma., such as electronic photo-flash power supplies, the type CK6174/CK1027 should be used as a replacement for the former type CK1013.

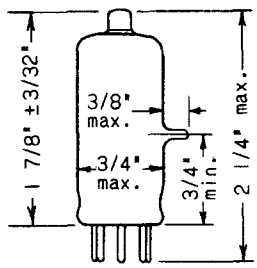

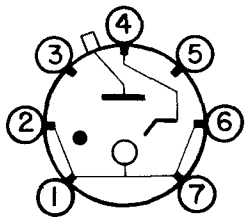

BOTTOM VIEW

5BU

MECHANICAL DATA

ENVELOPE: T-5½ Glass
BASE: Miniature Button 7-Pin
TOP CAP: Skirted Miniature
TERMINAL CONNECTIONS:

Pin 1 Cathode	Pin 5 No Connection ●
Pin 2 Cathode	Pin 6 Cathode
Pin 3 No Connection ●	Pin 7 Cathode
Pin 4 Starter Electrode	Top Cap Anode

MOUNTING POSITION: Any

ELECTRICAL DATA

RATINGS - ABSOLUTE MAXIMUM VALUES:

Peak Inverse Voltage	2800	volts
Peak Cathode Current (steady state) ♦	100	ma.
Peak Cathode Current (surge) ♦	300	ma.
Average Cathode Current (dc)	12	ma.
Maximum Anode Supply Voltage (peak)	1700	volts
Minimum Anode and Starter Electrode Supply Voltage (RMS) ▲	500	volts
Minimum Anode Supply Impedance	6000	ohms
Maximum Average Starter Electrode Current (Starter Electrode operating as a Cathode) ■	125	μa
Maximum Peak Starter Electrode Current (Starter Electrode operating as a Cathode) ■	300	μa.
Ambient Temperature Range	-50 to +60	°C

CHARACTERISTICS AND TYPICAL OPERATION - HALF-WAVE RECTIFIER 60~ SINUSOIDAL OPERATION:

Anode Supply Voltage (Epp) (rms)	1200	volts
Anode Supply Impedance (Zp)	7500	ohms
Starter Electrode Limiting Resistance	10	meg.
Load Current (dc)	12	ma.
Approximate Anode to Cathode Voltage Drop	100	volts
Load Condenser	0.5	μf
Load Resistor	0.09	meg.

● *The socket terminals for pins 3 and 5 cannot be used as tie point terminal lugs and may not be connected to any other point in the circuit except to the cathode.*

♦ *To avoid damage to the equipment or tube, it is recommended that the anode supply impedance be adjusted to limit forward currents and intermittent reverse peak currents to stated values. Minimum resistance is 6000 ohms minus the effective equivalent transformer impedance, but never less than 2000 ohms dc resistance. For voltage multiplier circuits, a separate limiting resistor should be connected in series with the anode or cathode of each tube. In the event of a reverse arc, the absence of a 2000 ohm surge limiting resistor causes all of the energy of the filter condenser to be dissipated in the tube.*

▲ *With starter electrode connected to anode through 10 megohms of resistance.*

■ *With the starter electrode connected to operate as an anode on the forward half of the cycle, the starter cathode current rating is the on limitation on the starter electrode current.*

TYPICAL VOLTAGE DOUBLER CIRCUIT FOR COLD CATHODE RECTIFIER

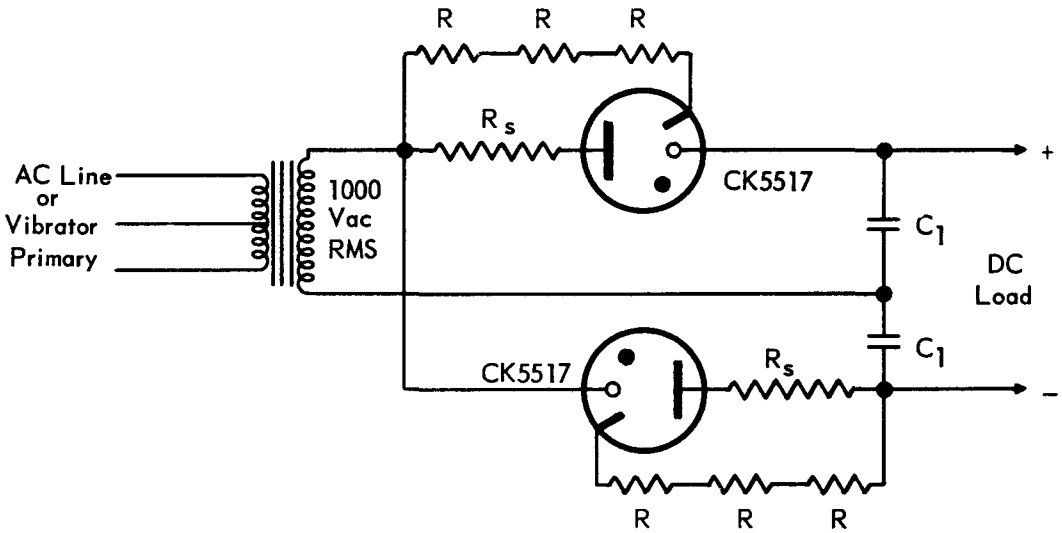

Rs= Surge Resistor. Adjust to keep Peak Cathode Current (steady state) and Peak Cathode Current (surge) within ratings of 100 ma. and 300 ma., respectively. Rs should not be less than 2000 ohms in voltage doubler circuits regardless of transformer characteristics.

R= 3.3 meg., 1/2 watt, 350 Vdc.

C1= 1.0 μf, 1500 V (Typical for 60 cycle operation.)

****

TYPICAL HALF-WAVE CIRCUIT FOR COLD CATHODE RECTIFIER

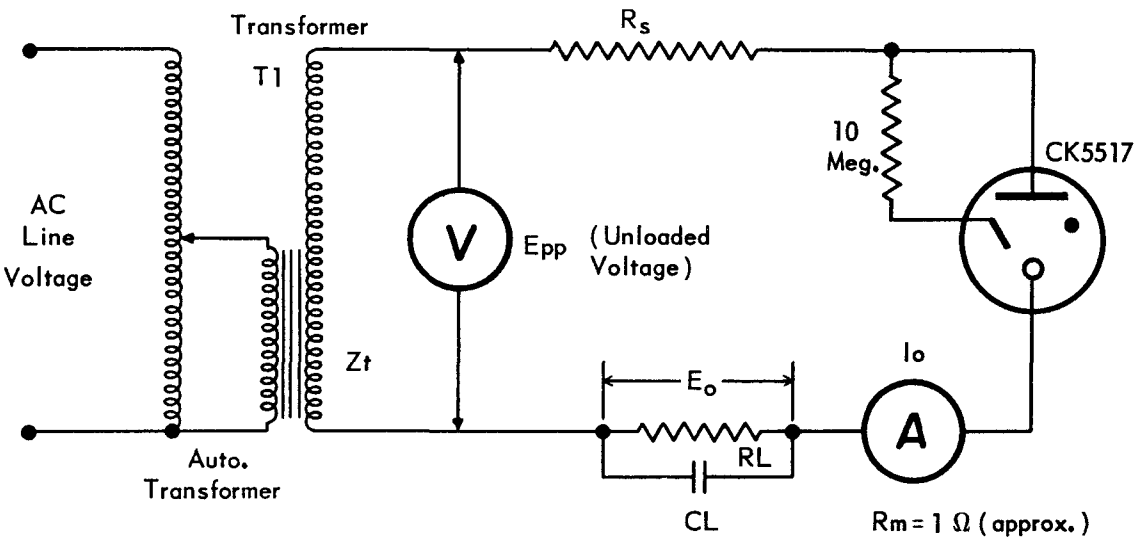
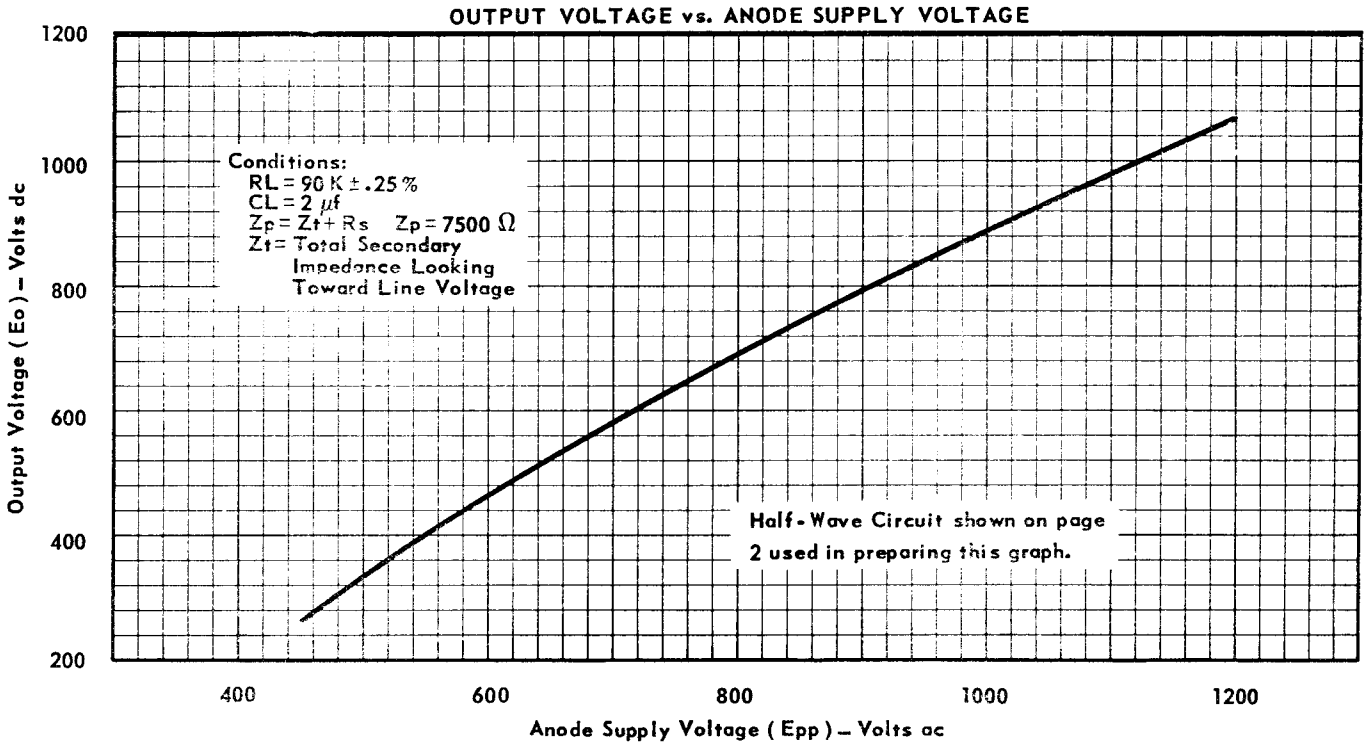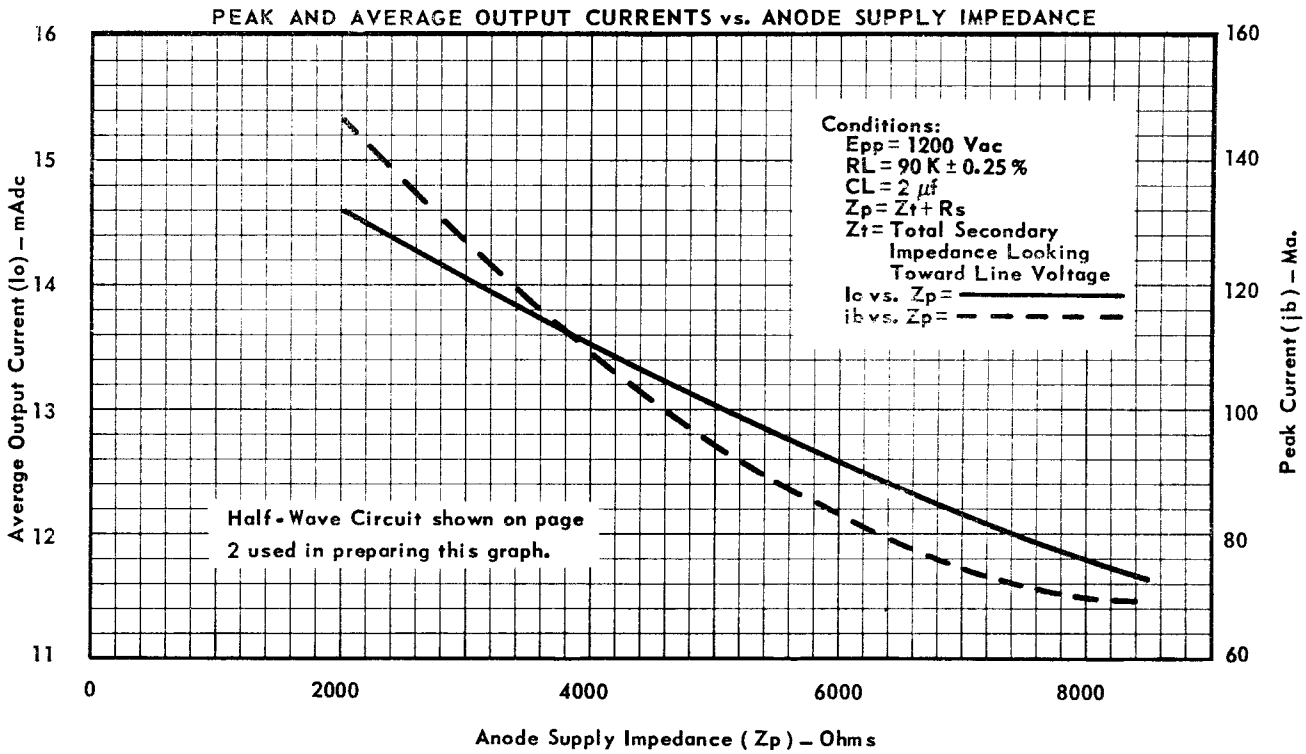
COLD CATHODE HALF-WAVE RECTIFIER