EITEL-McCULLOUGH, INC.
SAN BRUNO, CALIFORNIA

4X150G

RADIAL-BEAM POWER TETRODE

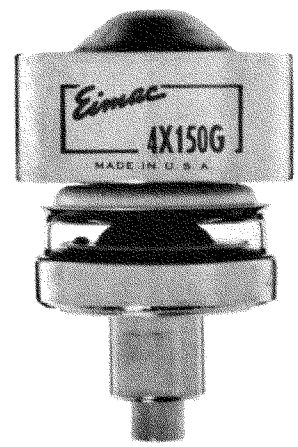

The Eimac 4X150G is an extremely compact external-anode tetrode intended for use as a radio-frequency amplifier, frequency multiplier, or oscillator at frequencies well into the UHF region or as an amplifier in any service requiring a high-gain tube capable of delivering high power-output at low plate-voltage. The combination of a high ratio of transductance to capacitance and a plate dissipation capability of 150 watts make the tube an excellent wide-band amplifier for video applications.

The cathode, grid and screen electrodes are mounted on conical and cylindrical supports giving a minimum of circuit discontinuities and lead inductance. The rugged cylindrical terminals, progressively larger in size, allow the tube to be inserted in coaxial line cavities. The screen support and terminal provide maximum isolation between the grid-cathode terminals and the plate circuit.

In amplifier service at 500 megacycles, output power of 140 watts per tube, with a stage power-gain of 14, can be obtained. At 1000 megacycles an output power of 50 watts per tube is obtained with a power-gain of five.

GENERAL CHARACTERISTICS

ELECTRICAL		
Cathode: Coated Unipotential		
Heater Voltage	2.5	volts
Heater Current	6.25	amperes
Minimum Heating Time	45	seconds
Screen-Grid Amplification Factor (Average)	5.0	
Direct Interelectrode Capacitances (Average)	Grounded Grid	Grounded Cathode
Feedback (without shielding)	less than 0.005	0.035 μμfd
Input	17.	27 μμfd
Output	4.5	4.5 μμfd
Transconductance (I_b=250 ma., E_b=500v., E_{c2}=250 V.)	12,000	μmhos
MECHANICAL		
Cooling	Forced Air	
Mounting position	Any	
Maximum Over-all Dimensions		
Length	2¾	inches
Diameter	1.635	inches
Maximum Seated Height	1-27/32	inches
Net Weight	6	ounces
Shipping Weight (Average)	1.6	pounds

Note: Typical operation data are based on conditions of adjusting the r-f grid drive to a specified plate current, maintaining fixed conditions of grid bias and screen voltage. It will be found that if this procedure is followed, there will be little variation in power output between tubes even though there may be some variation in grid and screen currents. Where grid bias is obtained principally by means of a grid resistor, to control plate current it is necessary to make the resistor adjustable.

RADIO-FREQUENCY POWER AMPLIFIER OR OSCILLATOR

Class-C Telegraphy or FM Telephony
(Key-down conditions, per tube)

MAXIMUM RATINGS

D-C PLATE VOLTAGE	1250	MAX. VOLTS
D-C SCREEN VOLTAGE	300	MAX. VOLTS
D-C GRID VOLTAGE	—250	MAX. VOLTS
D-C PLATE CURRENT	250	MAX. MA
PLATE DISSIPATION	150	MAX. WATTS
SCREEN DISSIPATION	12	MAX. WATTS
GRID DISSIPATION	2	MAX. WATTS

TYPICAL OPERATION (Frequencies up to 165 Mc., per tube)

D-C Plate Voltage	600	750	1000	1250	volts
D-C Screen Voltage	250	250	250	250	volts
D-C Grid Voltage	—75	—80	—80	—90	volts
D-C Plate Current	200	200	200	200	ma
D-C Screen Current	37	37	30	20	ma
D-C Grid Current	10	10	10	10	ma
Peak R-F Grid Voltage (approx.)	90	95	95	105	volts
Driving Power	0.7	0.7	0.7	0.8	watts
Plate Power Input	120	150	200	250	watts
Plate Power Output	85	110	150	195	watts

The performance figures for frequencies up to 165 Mc. are obtained by calculation from the tube characteristic curves and confirmed by direct tests. The driving power includes only power taken by the tube grid and the bias circuit. The driving power and output power do not allow for losses in the associated resonant circuits.

TYPICAL OPERATION (Single tube, 500 Mc., coaxial cavity)

D-C Plate Voltage	600	800	1000	1250	volts
D-C Screen Voltage	250	250	250	250	volts
D-C Grid Voltage	—80	—80	—80	—80	volts
D-C Plate Current	200	200	200	200	ma
D-C Screen Current	7	7	7	7	ma
D-C Grid Current	10	10	10	10	ma
Driver Output Power (approx.)	10	10	10	10	watts
Power Input	120	160	200	250	watts
Useful Power Output	65	90	110	140	watts

These typical performance figures were obtained by direct measurement in operating equipment. The output power is useful power measured in a load circuit. The driving power is the total power taken by the tube and a practical resonant circuit. In many cases with further refinement and improved techniques better performance might be obtained.

Effective 9-1-55 (Copyright 1954 by Eitel-McCullough, Inc.)

PLATE-MODULATED RADIO-FREQUENCY AMPLIFIER

Class-C Telephony (Carrier conditions, per tube)

MAXIMUM RATINGS

D-C PLATE VOLTAGE	1000 MAX. VOLTS
D-C SCREEN VOLTAGE	300 MAX. VOLTS
D-C GRID VOLTAGE	—250 MAX. VOLTS
D-C PLATE CURRENT	200 MAX. MA
PLATE DISSIPATION	100 MAX. WATTS
SCREEN DISSIPATION	12 MAX. WATTS
GRID DISSIPATION	2 MAX. WATTS

TYPICAL OPERATION (Frequencies up to 165 Mc.)

D-C Plate Voltage	400	600	800	1000	volts
D-C Screen Voltage	250	250	250	250	volts
D-C Grid Voltage	—90	—95	—100	—105	volts
D-C Plate Current	200	200	200	200	ma
D-C Screen Current	40	35	25	20	ma
D-C Grid Current	7	8	10	15	ma
Peak A-F Screen Voltage at crest of 100% Modulation	140	150	160	170	volts
Peak R-F Grid Input Voltage (approx.)	110	120	120	125	volts
Driving Power (approx.)	1	1	1.5	2	watts
Plate Dissipation	25	40	60	60	watts
Plate Power Input	80	120	160	200	watts
Plate Power Output	55	80	100	140	watts

RADIO-FREQUENCY POWER AMPLIFIER

Class-B Linear, Television Visual Service (per tube)

MAXIMUM RATINGS

D-C PLATE VOLTAGE	1250 MAX. VOLTS
D-C SCREEN VOLTAGE	400 MAX. VOLTS
D-C GRID VOLTAGE	—250 MAX. VOLTS
D-C PLATE CURRENT (AVERAGE)	250 MAX. MA
PLATE DISSIPATION	150 MAX. WATTS
SCREEN DISSIPATION	12 MAX. WATTS
GRID DISSIPATION	2 MAX. WATTS

TYPICAL OPERATION (Frequencies up to 216 Mc., 5-Mc. bandwidth)

D-C Plate Voltage	750	1000	1250	volts
D-C Screen Voltage	300	300	300	volts
D-C Grid Voltage	—60	—65	—70	volts
During Sync-Pulse Peak:				
D-C Plate Current	335	330	305	ma
D-C Screen Current	50	45	45	ma
D-C Grid Current	15	20	25	ma
Peak R-F Grid Voltage	85	95	100	volts
R-F Driver Power (approx.)	7	8	9	watts
Useful Power Output	135	200	250	watts
Black Level:				
D-C Plate Current	245	240	230	ma
D-C Screen Current	20	15	10	ma
D-C Grid Current	4	4	4	ma
Peak R-F Grid Voltage (approx.)	65	70	75	volts
R-F Driver Power (approx.)	4.25	4.7	5.5	watts
Plate Power Input	185	240	290	watts
Useful Power Output	75	110	140	watts

PLATE PULSED RADIO FREQUENCY AMPLIFIER OR OSCILLATOR

MAXIMUM RATINGS

PULSED PLATE VOLTAGE	7000 MAX. VOLTS
PULSED SCREEN VOLTAGE	1500 MAX. VOLTS
D-C GRID VOLTAGE	—500 MAX. VOLTS
MAXIMUM PULSE DURATION	5 MICROSECONDS
PULSED CATHODE CURRENT	7 MAX. AMPS
AVERAGE POWER INPUT	250 MAX. WATTS
PLATE DISSIPATION	150 MAX. WATTS
SCREEN DISSIPATION	15 MAX. WATTS
GRID DISSIPATION	2 MAX. WATTS

TYPICAL PULSE OPERATION

Single tube oscillator, 1200-Mc.

Pulsed Plate Voltage	5	7	Kilovolts
Pulsed Plate Current	4.0	6.0	Amps.
Pulsed Screen Voltage	800	1000	Volts
Pulsed Screen Current	0.3	0.4	Amps.
D-C Grid Voltage	—200	—250	Volts
Pulsed Grid Current	0.5	0.6	Amps.
Pulse Duration	4	4	Microseconds
Pulse Repetition Rate	2500	1250	Per second
Peak Power Output	7	17	Kilowatts

APPLICATION

MECHANICAL

Mounting—The 4X150G may be mounted in any position. The concentric arrangement of the electrode terminals permits the use of the 4X150G in coaxial line type circuits to advantage.

Connections to the contact surfaces should be made by means of spring-finger collets which have sufficient pressure to maintain a good electrical contact at all fingers. The presence of non-contacting, or intermittently-contacting, fingers may result in erratic circuit operation, particularly at very-high- or ultra-high-frequencies. Points of electrical contact should be kept clean and free of oxidation to minimize r-f losses.

Cooling—The 4X150G requires sufficient forced-air cooling to keep the cooler core and the metal parts of the metal-to-glass seals from exceeding a maximum temperature of 150°C. The air flow must be started when power is applied to the heater, and must continue without interruption until all electrode voltages have been removed from the tube.

Effective cooling of the anode is accomplished by directing six cubic feet per minute of air through the anode cooler. This flow is obtained at a pressure drop across the cooler of approximately 0.25 inch of water column. The grid, cathode and heater terminals are cooled by high velocity air directed at the terminals and the connecting collets which aid in the removal of heat from the terminals by conduction. The volume required will depend upon the socket arrangement and should be adequate to keep the metal-to-glass seals below 150°C and the center heater terminal below 200°C.

The air requirements stated above are based on op-

eration at sea level and an ambient temperature of 20°C. Operation at high altitudes or at high ambient temperatures requires a greater volume of air flow. The necessary design information for such conditions is contained in an article entitled "Blower Selection for Forced-Air-Cooled Tubes," by A. G. Nekut, in the August, 1950, issue of "Electronics."

Temperature of the external parts of a tube may be measured with the aid of "Tempilaq," a temperature-sensitive lacquer manufactured by the Tempil Corporation, 11 West 25th Street, New York 10, N. Y.

ELECTRICAL

Heater—The heater should be operated as close to 2.5 volts as possible, but it will withstand heater-voltage variations as great as 10% without injury. Some variation in power output must be expected to occur with variations of the heater voltage. In UHF operation of the 4X150G some advantage can be gained by operation of the heater at reduced voltages to compensate for cathode back-heating. Under conditions of operation for maximum power output at frequencies between 500 and 1000 Mc the heater voltage may be reduced to 2.4 volts. 2.3 volts is usually adequate for similar conditions at frequencies from 1000 to 1500 Mc.

Grid Dissipation—Grid-circuit driving-power requirements increase with increasing frequency because of losses other than grid dissipation. This becomes noticeable at frequencies above 150 megacycles and increases until at 500 Mc the required driving power may be as much as 15 watts in an ordinary circuit.

Despite the increased driving power required by the circuit as a whole at higher frequencies, the power actually dissipated at the tube grid does not increase greatly. Satisfactory operation in stable amplifier circuits is indicated by d-c grid-current values below approximately 15 milliamperes.

Screen Dissipation—Bias- or plate-supply failure or unloaded-plate-circuit operation can cause the screen current and dissipation to rise to excessive values. Protection for the screen can be provided by an overload relay in the screen circuit, in addition to the usual plate-overload relay. Use of a screen-current milliammeter is advisable.

Plate Dissipation—The maximum-rated plate dissipation is 150 watts. The maximum-rated plate dissipation for plate-modulated applications is 100 watts under carrier conditions, which permits the plate dissipation to rise to 150 watts under 100% sinusoidal modulation. Plate dissipation may be permitted to exceed the maximum rating momentarily, as, for instance, during tuning procedures.

UHF Operation—Transit-time effects, which occur at ultra-high frequencies in the 4X150G, can be minimized by adherence to the operating practices suggested below:

1. Use a minimum d-c bias voltage, not over twice cut-off.
2. Apply only enough drive to obtain satisfactory plate efficiency.
3. Operate the screen at reasonably high voltage, but do not exceed the screen-dissipation rating. The circuit should be loaded to obtain screen-current values close to those given under "Typical Operation" at 500 Mc.
4. Fairly heavy plate loading is required. In general, low-voltage, high-current operation is preferable to operation at high voltages and low currents. If conditions require a change to lighter plate loading, the drive should also be reduced to the minimum value for satisfactory operation at the new output level.
5. Parasitic oscillations are usually associated with excessive grid and screen currents and are injurious to vacuum tubes. Similarly, tuned-plate circuits which accidentally become simultaneously resonant to harmonics and the fundamental frequency may also cause low efficiency and resultant tube damage.

Plate Modulation—Plate modulation can be applied to the 4X150G when it is operated as a class-C radio-frequency amplifier. To obtain 100% modulation, the d-c screen voltage must be modulated in phase with the plate modulation. Self-modulation of the screen by means of a series resistor or reactor may not be satisfactory in this particular tetrode due the screen-voltage, screen-current characteristic.

Grid Resistance—In class-A and -AB_1 amplifiers, where no grid current flows, the grid-bias voltage may be applied through a resistor. The maximum permissible series resistance per tube is 100,000 ohms.

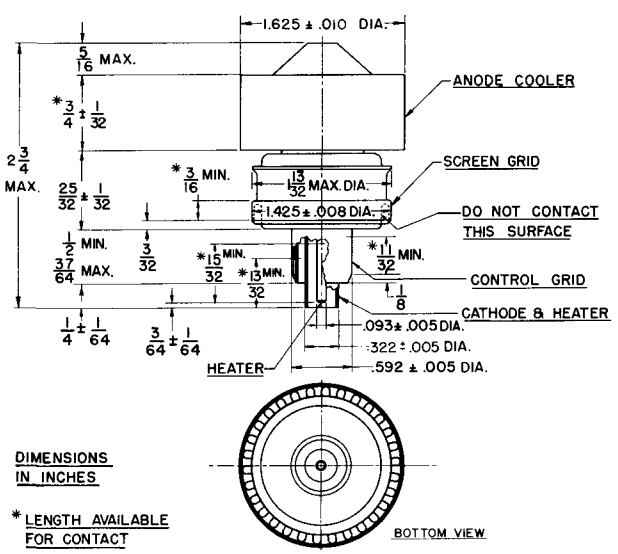

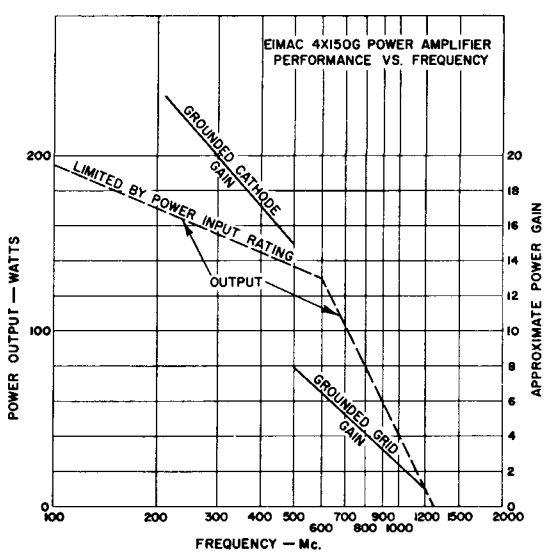

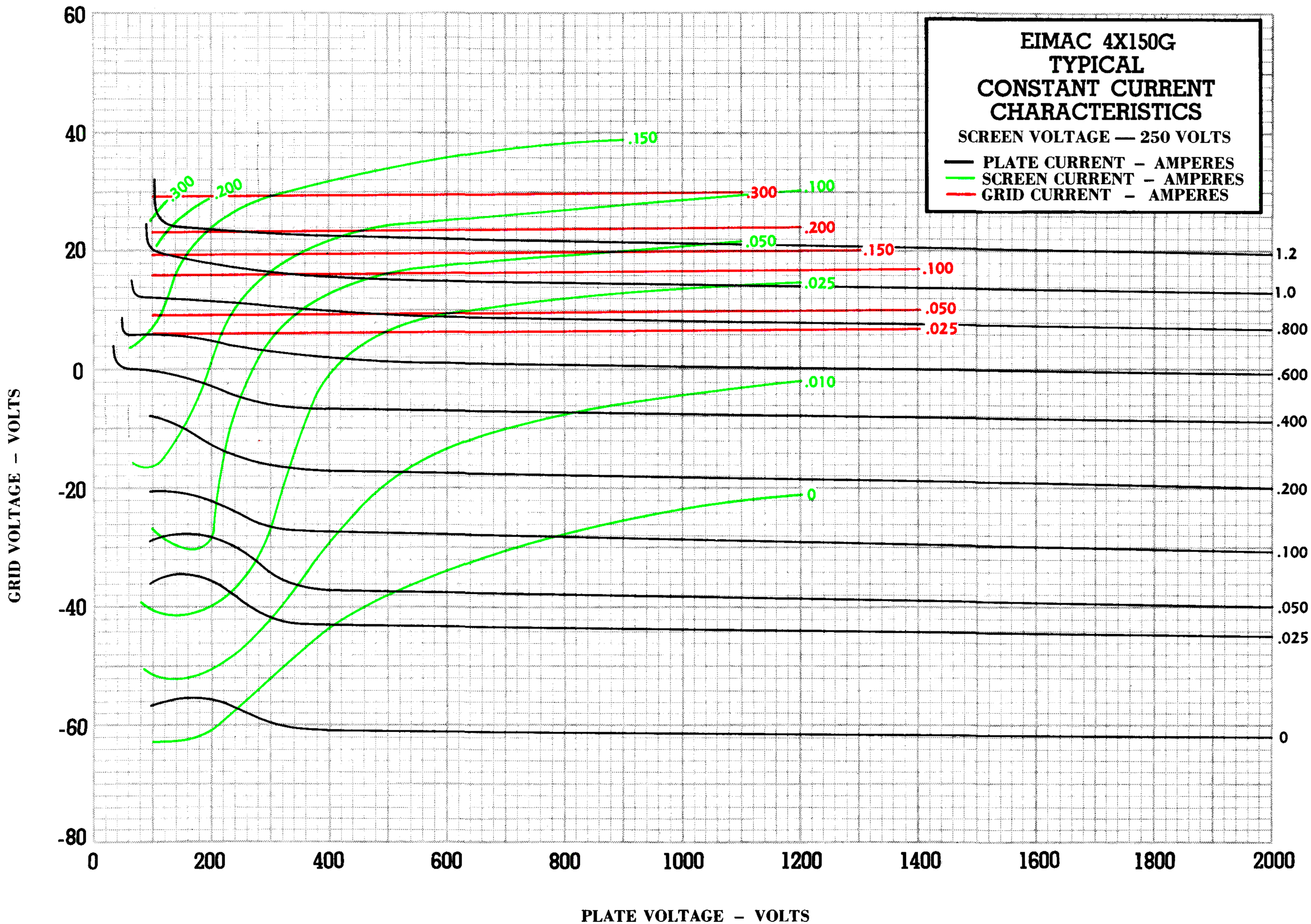

Eimac
4X150G

Printed in U.S.A. 6-89047