EITEL-McCULLOUGH, INC.
SAN BRUNO, CALIFORNIA

4X150A

RADIAL-BEAM POWER TETRODE

These Data apply to type 4X150D which is identical to 4X150A except for the heater rating of 26.5 volts 0.57 ampere.

The Eimac 4X150A is a compact power tetrode intended for use as an amplifier, oscillator or frequency multiplier over a wide range of frequencies extending into the UHF region. It is cooled by forced air.

A single 4X150A operating in a coaxial-cavity amplifier circuit will deliver up to 140 watts of useful power output at 500 megacycles.

The maximum rated plate voltage for the 4X150A is 1250 volts, and the tube is capable of good performance with plate voltages as low as 400 volts. Its high ratio of transconductance to capacitance and its 150-watt plate dissipation rating make the 4X150A useful for wide-band amplifier applications.

The use of the Eimac 4X150A Air-System Socket, or a socket providing equivalent air-cooling facilities, is required.

GENERAL CHARACTERISTICS

ELECTRICAL

Cathode: Oxide Coated, Unipotential		
Minimum Heating Time	30	seconds
Cathode-to-Heater Voltage	150	max. volts
Heater: Voltage	6.0	volts
Current	2.6	amperes
Grid-Screen Amplification Factor (Average)	5	
Direct Interelectrode Capacitances (Average)		
Grid-Plate	0.03	$\mu\mu f$
Input	15.5	$\mu\mu f$
Output	4.5	$\mu\mu f$
Transconductance (E_b=500v., E_{c2}=250v., I_b=200 ma)	12,000	μmhos
Frequency for Maximum Ratings	500	Mc

MECHANICAL

Base	9-pin, special
Recommended Socket	Eimac 4X150A Air-System Socket
Base Connections	See outline drawing
Mounting	Any position
Cooling	Forced air
Maximum Overall Dimensions:	
Length	2.47 inches
Diameter	1.65 inches
Seated Height	1.91 inches
Net Weight	5.2 ounces
Shipping Weight	1.6 pounds

Note: Typical operation data are based on conditions of adjusting the r-f grid drive to a specified plate current, maintaining fixed conditions of grid bias and screen voltage. It will be found that if this procedure is followed, there will be little variation in power output between tubes even though there may be some variation in grid and screen currents. Where grid bias is obtained principally by means of a grid resistor, to control plate current it is necessary to make the resistor adjustable.

RADIO-FREQUENCY POWER AMPLIFIER OR OSCILLATOR

Class-C Telegraphy or FM Telephony (Key-down conditions, per tube)

MAXIMUM RATINGS

D-C PLATE VOLTAGE	1250 MAX. VOLTS
D-C SCREEN VOLTAGE	300 MAX. VOLTS
D-C GRID VOLTAGE	–250 MAX. VOLTS
D-C PLATE CURRENT	250 MAX. MA
PLATE DISSIPATION	150 MAX. WATTS
SCREEN DISSIPATION	12 MAX. WATTS
GRID DISSIPATION	2 MAX. WATTS

TYPICAL OPERATION (Frequencies up to 165 Mc., per tube)

D-C Plate Voltage	600	750	1000	1250	volts
D-C Screen Voltage	250	250	250	250	volts
D-C Grid Voltage	–75	–80	–80	–90	volts
D-C Plate Current	200	200	200	200	ma
D-C Screen Current	37	37	30	20	ma
D-C Grid Current	10	10	10	10	ma
Peak R-F Grid Voltage (approx.)	90	95	95	105	volts
Driving Power (approx.)	1	1	1	1.2	watts
Plate Power Input	120	150	200	250	watts
Plate Power Output	85	110	150	195	watts

The performance figures for frequencies up to 165 Mc. are obtained by calculation from the tube characteristic curves and confirmed by direct tests. The driving power includes only power taken by the tube grid and the bias circuit. The driving power and output power do not allow for losses in the associated resonant circuits.

TYPICAL OPERATION (Single tube, 500-Mc| coaxial ,cavity)

D-C Plate Voltage	600	800	1000	1250	volts
D-C Screen Voltage	250	250	250	280	volts
D-C Grid Voltage	–110	–110	–110	–115	volts
D-C Plate Current	170	200	200	200	ma
D-C Screen Current	6	7	7	5	ma
D-C Grid Current	6	10	10	10	ma
Driver Output Power (approx.)	15	20	25	30	watts
Power Input	102	160	200	250	watts
Useful Power Output	50	95	120	140	watts

These typical performance figures were obtained by direct measurement in operating equipment. The output power is useful power measured in a load circuit. The driving power is the total power taken by the tube and a practical resonant circuit. In many cases with further refinement and improved techniques better performance might be obtained.

(Effective 8-15-52) Copyright 1952 by Eitel-McCullough, Inc.

PLATE-MODULATED RADIO-FREQUENCY AMPLIFIER

Class-C Telephony (Carrier conditions, per tube)

MAXIMUM RATINGS

D-C PLATE VOLTAGE	1000	MAX. VOLTS
D-C SCREEN VOLTAGE	300	MAX. VOLTS
D-C GRID VOLTAGE	–250	MAX. VOLTS
D-C PLATE CURRENT	200	MAX. MA
PLATE DISSIPATION	100	MAX. WATTS
SCREEN DISSIPATION	12	MAX. WATTS
GRID DISSIPATION	2	MAX. WATTS

TYPICAL OPERATION (Frequencies up to 165 Mc.)

D-C Plate Voltage	400	600	800	1000	volts
D-C Screen Voltage	250	250	250	250	volts
D-C Grid Voltage	–90	–95	–100	–105	volts
D-C Plate Current	200	200	200	200	ma
D-C Screen Current	40	35	25	20	ma
D-C Grid Current	7	8	10	15	ma
Peak A-F Screen Voltage at crest of 100% Modulation	140	150	160	170	volts
Peak R-F Grid Input Voltage (approx.)	110	120	120	125	volts
Driving Power (approx.)	1	1	1.5	2	watts
Plate Dissipation	25	40	60	60	watts
Plate Power Input	80	120	160	200	watts
Plate Power Output	55	80	100	140	watts

RADIO-FREQUENCY POWER AMPLIFIER

Class-B Linear, Television Visual Service (per tube)

MAXIMUM RATINGS

D-C PLATE VOLTAGE	1250	MAX. VOLTS
D-C SCREEN VOLTAGE	400	MAX. VOLTS
D-C GRID VOLTAGE	–250	MAX. VOLTS
D-C PLATE CURRENT (AVERAGE)	250	MAX. MA
PLATE DISSIPATION	150	MAX. WATTS
SCREEN DISSIPATION	12	MAX. WATTS
GRID DISSIPATION	2	MAX. WATTS

TYPICAL OPERATION (Frequencies up to 216 Mc., 5-Mc. bandwidth)

D-C Plate Voltage	750	1000	1250	volts
D-C Screen Voltage	300	300	300	volts
D-C Grid Voltage	–60	–65	–70	volts
During Sync-Pulse Peak:				
D-C Plate Current	335	330	305	ma
D-C Screen Current	50	45	45	ma
D-C Grid Current	15	20	25	ma
Peak R-F Grid Voltage	85	95	100	volts
R-F Driver Power (approx.)	7	8	9	watts
Useful Power Output	135	200	250	watts
Black Level:				
D-C Plate Current	245	240	230	ma
D-C Screen Current	20	15	10	ma
D-C Grid Current	4	4	4	ma
Peak R-F Grid Voltage (approx.)	65	70	75	volts
R-F Driver Power (approx.)	4.25	4.7	5.5	watts
Plate Power Input	185	240	290	watts
Useful Power Output	75	110	140	watts

CLASS-AB OR -B POWER AMPLIFIER OR MODULATOR

MAXIMUM RATINGS (Per tube)

D-C PLATE VOLTAGE	1250	MAX. VOLTS
D-C SCREEN VOLTAGE	400	MAX. VOLTS
D-C PLATE CURRENT	250	MAX. MA
PLATE DISSIPATION	150	MAX. WATTS
SCREEN DISSIPATION	12	MAX. WATTS
GRID DISSIPATION	2	MAX. WATTS

TYPICAL OPERATION

Class AB (Sinusoidal wave, two tubes unless otherwise specified)

D-C Plate Voltage	600	800	1000	1250	volts
D-C Screen Voltage	300	300	300	300	volts
D-C Grid Voltage (approx.)*	–44	–47	–47	–48	volts
Zero-Signal D-C Plate Current	160	120	120	115	ma
Max-Signal D-C Plate Current	380	380	380	390	ma
Zero-Signal D-C Screen Current	0	0	0	0	ma
Max-Signal D-C Screen Current	65	65	60	40	ma
Effective Load, Plate-to-Plate	3550	4625	5850	7200	ohms
Peak A-F Grid Input Voltage (per tube)	44	47	47	48	volts
Driving Power	0	0	0	0	watts
Max-Signal Plate Dissipation (per tube)	45	55	70	90	watts
Max-Signal Plate Power Output	140	195	240	310	watts

*Adjust grid voltage to obtain specified zero-signal plate current. Maximum permissible grid circuit series resistance 100,000 ohms per tube.

TYPICAL OPERATION

Class AB_2 (Sinusoidal wave, two tubes unless otherwise specified)

D-C Plate Voltage	600	800	1000	1250	volts
D-C Screen Voltage	300	300	300	300	volts
D-C Grid Voltage**	–41	–43	–43	–44	volts
Zero-Signal D-C Plate Current	185	160	165	180	ma
Max-Signal D-C Plate Current	485	490	495	475	ma
Zero-Signal D-C Screen Current	0	0	0	0	ma
Max-Signal D-C Screen Current	85	75	70	65	ma
Effective Load, Plate-to-Plate	2600	3500	4600	5600	ohms
Peak A-F Grid Input Voltage (per tube)	47	48	49	50	volts
Max-Signal Peak Driving Power	0.15	0.15	0.15	0.15	watts
Max-Signal Nominal Driving Power (approx.)	75	75	75	75	mw
Max-Signal Plate Dissipation (per tube)	60	75	90	85	watts
Max-Signal Plate Power Output	170	240	315	425	watts

**Adjust grid voltage to obtain specified zero-signal plate current.

APPLICATION

MECHANICAL

Mounting—The 4X150A may be mounted in any position. Use of the Eimac 4X150A Air-System Socket, or its equivalent, is required.

The tube will fit a standard "loktal" socket, but the use of such a socket prevents adequate air-cooling of the base of the tube. Use of the "loktal" socket is not recommended.

Connections to the terminals of all the electrodes except the plate are provided by the Air-System Socket. The anode-cooler assembly provides a terminal surface for the plate connection. For high-frequency applications a metal band or a spring-finger collet should be used to make good electrical contact with the cylindrical outer surface of the anode cooler. Points of electrical contact should be kept clean and free of oxidation to minimize r-f losses.

Cooling—The 4X150A requires sufficient forced-air cooling to keep the cooler core and the metal parts of the metal-to-glass seals from exceeding a maximum temperature of 150°C. The air flow must be started when power is applied to the heater, and must continue without interruption until all electrode voltages have been removed from the tube.

The Eimac Air-System Socket directs the air over the surfaces of the tube base, and through the anode cooler to provide effective cooling with a minimum air flow. Seven and one-half cubic feet of cooling air per minute must flow through the Air-System Socket and the anode cooler for adequate cooling. This corresponds to a total pressure drop of 0.6 inches of water through the socket and the anode cooler.

The air requirements stated above are based on operation at sea level and an ambient temperature of 20°C. Operation at high altitude or at high ambient temperatures requires a greater volume of air flow. The necessary design information for such conditions is contained in an article entitled "Blower Selection for Forced-Air-Cooled Tubes", by A. G. Nekut, in the August, 1950, issue of "Electronics."

One method of measuring temperature is provided by the use of the "Tempilaq", a temperature-sensitive lacquer, which melts when a given temperature is reached. Where forced-air cooling is employed, very thin applications of the lacquer must be used. This product is obtainable from the Tempil Corporation, 132 West 22nd St., New York 11, N. Y.

ELECTRICAL

Heater—The heater should be operated as close to 6.0 volts as possible, but it will withstand heater-voltage variations as great as 10% without injury. Some variation in power output must be expected to occur with variations of the heater voltage.

Cathode—The cathode is internally connected to the four even-numbered base pins. All four corresponding socket terminals should be used for connection to the external circuit. The leads should be of large cross-section and as short and direct as possible to minimize cathode-lead inductance.

Grid Dissipation—Grid-circuit driving-power requirements increase with increasing frequency because of circuit losses other than grid dissipation. This becomes noticeable at frequencies near 30 Mc., and increases until at 500 Mc. as much as 30 watts driving power may be required in ordinary circuits.

Despite the increased driving power required by the circuit as a whole at higher frequencies, the power actually consumed by the tube grid does not increase greatly. Satisfactory operation in stable amplifier circuits is indicated by d-c grid-current values below approximately 15 milliamperes.

Screen Dissipation—Bias- or plate-supply failure or unloaded-plate-circuit operation can cause the screen current and dissipation to rise to excessive values. Protection for the screen can be provided by an overload relay in the screen circuit, in addition to the usual plate-overload relay. Use of a screen-current milliammeter is advisable.

Plate Dissipation—The maximum-rated plate dissipation is 150 watts. The maximum-rated plate dissipation for plate-modulated applications is 100 watts under carrier conditions, which permits the plate dissipation to rise to 150 watts under 100% sinusoidal modulation.

Plate dissipation may be permitted to exceed the maximum rating momentarily, as, for instance, during tuning.

UHF Operation—Transit time effects, which occur at ultra-high frequencies in the 4X150A, can be minimized by adherence to the operating conditions suggested below:

1. Use a minimum d-c bias voltage, not over twice cut-off.
2. Apply only enough drive to obtain satisfactory plate efficiency.
3. Operate the screen at reasonably high voltage, but do not exceed the screen-dissipation rating. The circuit should be loaded to obtain screen-current values close to those given under "Typical Operation" at 500 Mc.
4. Fairly heavy plate loading is required. In general, low-voltage, high-current operation is preferable to operation at high voltage and low current. If conditions require a change to lighter plate loading, the drive should also be reduced to the minimum value for satisfactory operation at the new output level.
5. Parasitic oscillations are usually associated with excessive grid and screen current and are injurious to vacuum tubes. Similarly, tuned-plate circuits which accidentally become simultaneously resonant to harmonics and the fundamental frequency may also cause low efficiency and damage tubes.

Plate Modulation—Plate modulation can be applied to the 4X150A when it is operated as a class-C radio-frequency amplifier. To obtain 100% modulation, the d-c screen voltage must be modulated approximately 55%, in phase with the plate modulation. Self-modulation of the screen by means of a series resistor or reactor may not be satisfactory in this particular tetrode due to the screen-voltage, screen-current characteristics.

Grid Resistance—In class-A and -AB_1 amplifiers, where no grid current flows, the grid-bias voltage may be applied through a resistor. The maximum permissible series resistance per tube is 100,000 ohms.

Special Applications—If it is desired to operate this tube under conditions widely different than those given here, write to Eitel-McCullough, Inc., San Bruno, California, for information and recommendations.

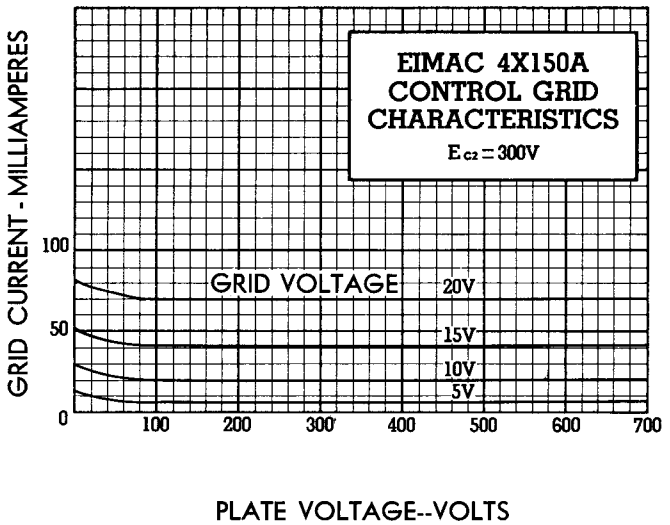
EIMAC 4X150A
CONTROL GRID
CHARACTERISTICS
Ec2 = 300V
GRID VOLTAGE
20V
15V
10V
5V
GRID CURRENT - MILLIAMPERES
0
50
100
100
200
300
400
500
600
700
PLATE VOLTAGE--VOLTS

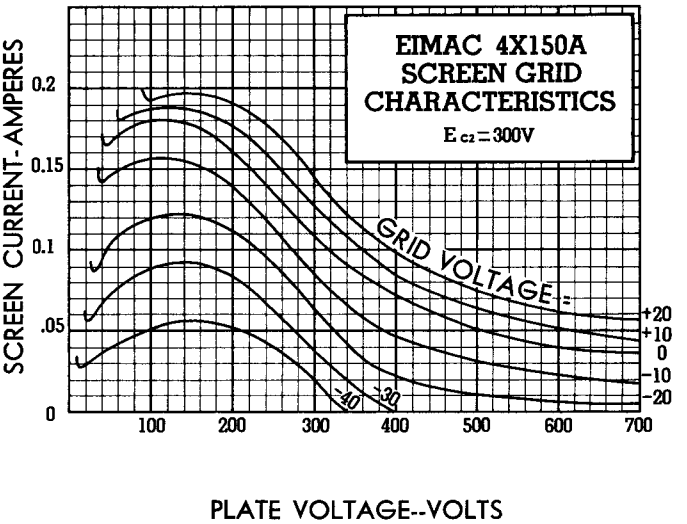
EIMAC 4X150A
SCREEN GRID
CHARACTERISTICS
Ec2 = 300V
GRID VOLTAGE
+20
+10
0
-10
-20
-40
-30
SCREEN CURRENT-AMPERES
0
.05
0.1
0.15
0.2
100
200
300
400
500
600
700
PLATE VOLTAGE--VOLTS

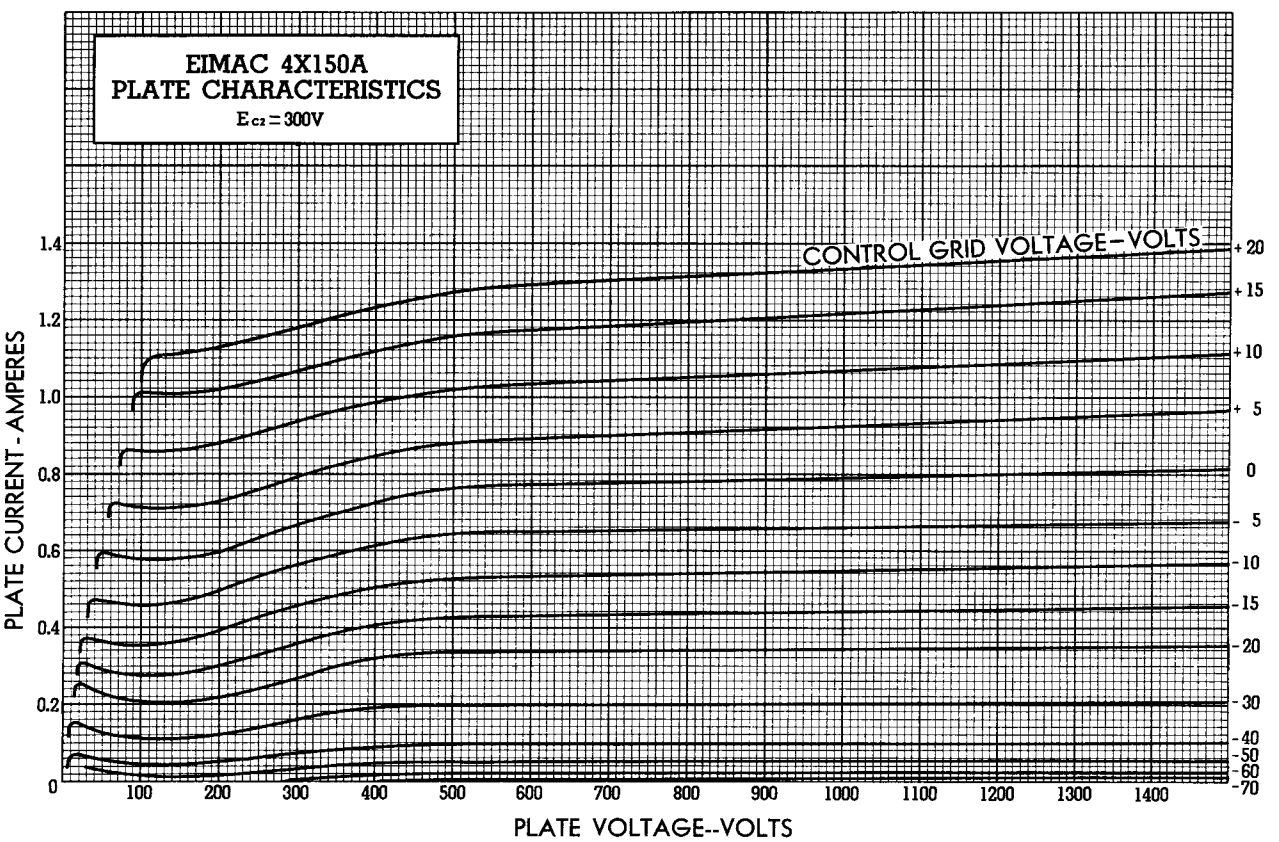
EIMAC 4X150A
PLATE CHARACTERISTICS
Ec2 = 300V
CONTROL GRID VOLTAGE-VOLTS
+20
+15
+10
+5
0
-5
-10
-15
-20
-30
-40
-50
-60
-70
PLATE CURRENT - AMPERES
0
0.2
0.4
0.6
0.8
1.0
1.2
1.4
100
200
300
400
500
600
700
800
900
1000
1100
1200
1300
1400
PLATE VOLTAGE--VOLTS

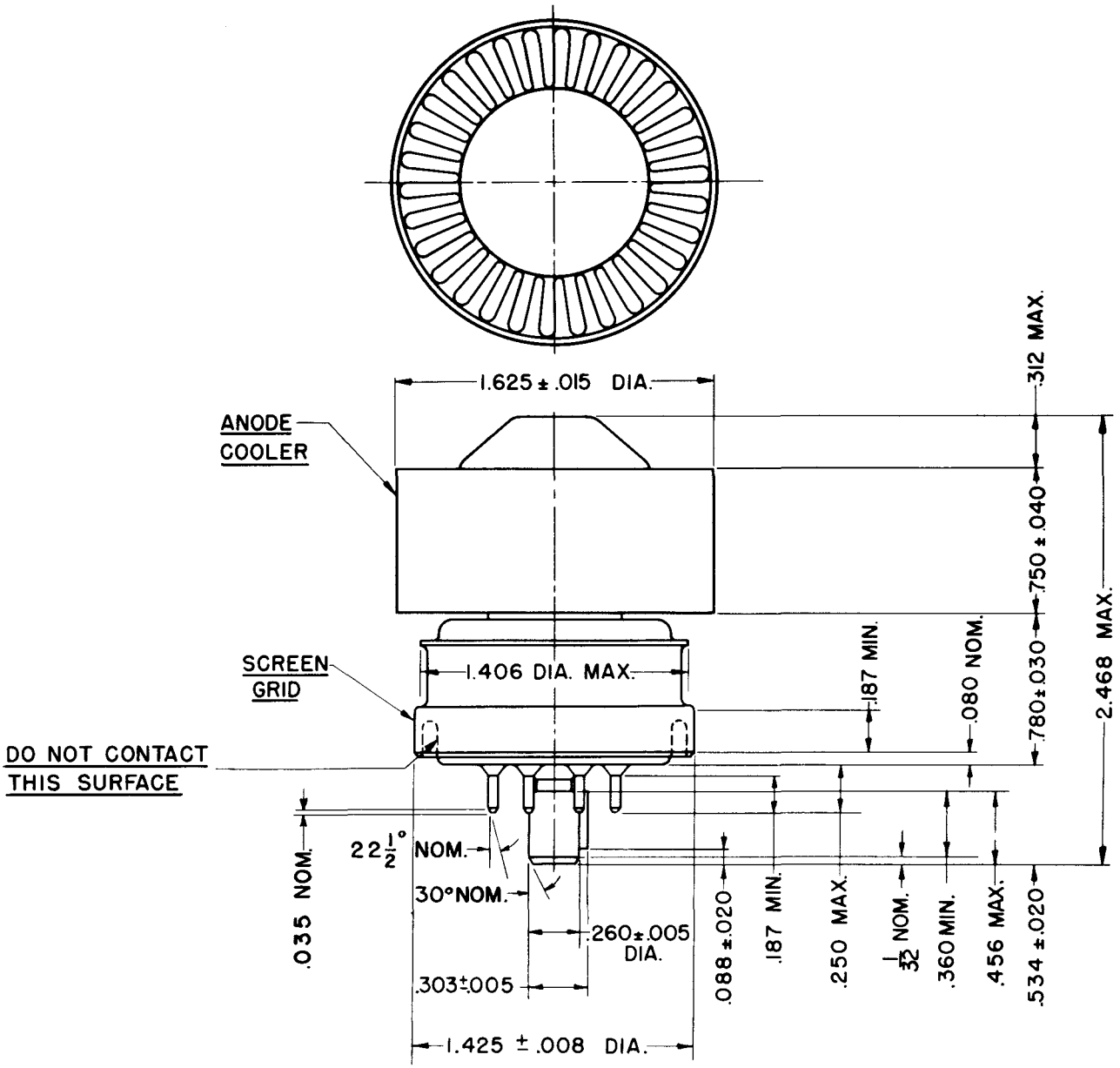

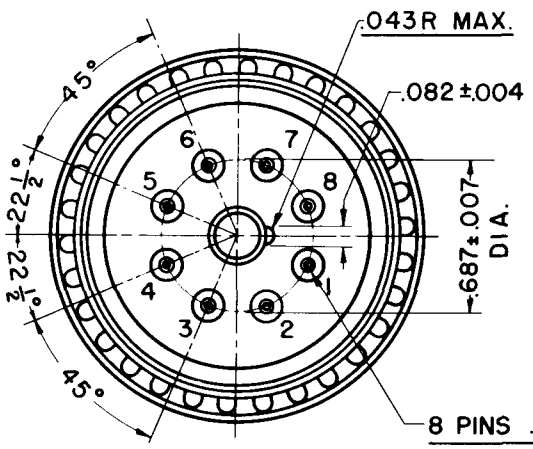

PIN NO. 1 SCREEN GRID
PIN NO. 2 CATHODE
PIN NO. 3 HEATER
PIN NO. 4 CATHODE
PIN NO. 5 I.C. DO NOT USE FOR EXTERNAL CONNECTION
PIN NO. 6 CATHODE
PIN NO. 7 HEATER
PIN NO. 8 CATHODE
CENTER PIN-CONTROL GRID

DIMENSIONS IN INCHES

BOTTOM VIEW

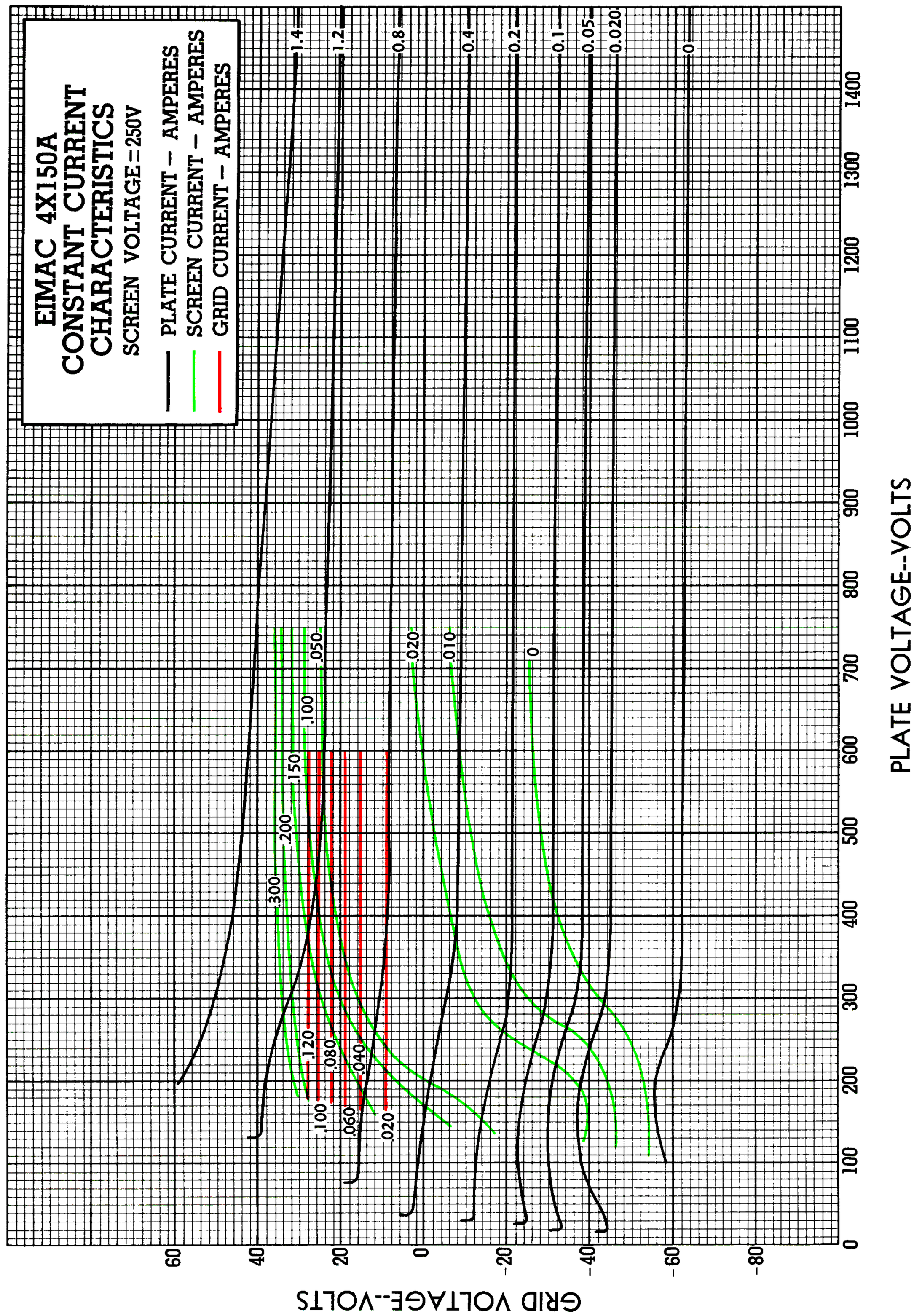

Printed in U.S.A. 3-A1-70322