CHARACTERISTICS

GENERAL DATA

Focusing Method	Electrostatic
Deflection Method	Electrostatic

Types*	Fluorescence	Phosphorescence	Persistence
4MP1	Green	——	Medium
4MP2	Blue - Green	Green	Long
4MP7	Blue - White	Yellow	Long
4MP11	Blue	——	Short

Faceplate	Spherical, Clear

*In addition to the types shown, the 4MP — can be supplied with several other screen phosphors.

ELECTRICAL DATA

Heater Voltage	6.3 Volts
Heater Current	0.6 ± 10% Amperes
Direct Interelectrode Capacitances	
Cathode to All Other Electrodes	5.0 μμf
Grid No. 1 to All Other Electrodes	6.2 μμf
Between Deflecting Plates 1-2[11]	2.7 μμf
Between Deflecting Plates 3-4[11]	1.9 μμf
Deflecting Plate 1 to All Other Electrodes	5.8 μμf
Deflecting Plate 2 to All Other Electrodes	5.8 μμf
Deflecting Plate 3 to All Other Electrodes	4.3 μμf
Deflecting Plate 4 to All Other Electrodes	4.0 μμf

MECHANICAL DATA

Minimum Useful Screen (Rounded Corners)	2⅞ x 2⅞ Inches
Bulb Contact (Recessed Small Ball Cap)	J1-22
Neck Contacts (Anode No. 2 and Deflection Plates)	J1-25
Bulb	LEA 467 or Equivalent
Weight (Approx.)	1½ Pounds
Base (Small Shell Duodecal 12-Pin)	B12-43
Basing	12Z
Base Alignment	
D1-D2 trace aligns with Pin No. 5 and Tube Axis	±10 Degrees
Positive Voltage on D1 deflects beam approx. toward Pin No. 5	
Positive Voltage on D3 deflects beam approx. toward Pin No. 2	
Bulb Contact Alignment	
J1-22 Contact Aligns with D1-D2 Trace	±10 Degrees
J1-22 Contact on Same Side as Pin No. 5	
Trace Alignment	
Angle between D1-D2 and D3-D4 Trace	90 ± 1 Degrees
D1-D2 Trace Aligns with Bulb Wall	± 1.5 Degrees

QUICK REFERENCE DATA

3½" x 3½" Direct Viewed
Square Glass Type
Spherical Clear Faceplate
Electrostatic Focus
Electrostatic Deflection
Post Deflection Acceleration
Deflection Plate
Connectors on Neck Wall

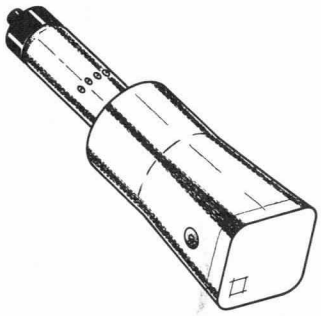

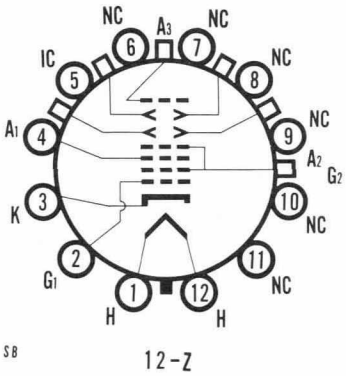

SYLVANIA
ELECTRONIC TUBES

A Division of
Sylvania Electric Products Inc.

PICTURE TUBE OPERATIONS
SENECA FALLS, NEW YORK

Prepared and Released By The
TECHNICAL PUBLICATIONS SECTION
EMPORIUM, PENNSYLVANIA

MARCH, 1960

File Under
SPECIAL AND GENERAL PURPOSE
CATHODE RAY TUBES

RATINGS

MAXIMUM RATINGS (Absolute Maximum Values)

Anode No. 2 Input	6.6 Watts
Anode No. 3 Voltage	6600 Volts dc
Anode No. 2 Voltage	3300 Volts dc
Ratio of Anode No. 3 Voltage to Anode No. 2 Voltage[1]	2 :1
Anode No. 1 Voltage (Focusing Electrode)	1100 Volts dc
Grid No. 1 Voltage	
Negative Bias Value	220 Volts dc
Positive Bias Value	0 Volts dc
Positive Peak Value	0 Volts
Peak Heater-Cathode Voltage	
Heater Negative with Respect to Cathode	200 Volts
Heater Positive with Respect to Cathode	200 Volts
Peak Voltage Between Anode No. 2 and Any Deflecting Plate	600 Volts

TYPICAL OPERATING CONDITIONS

Anode No. 3 Voltage	4000 Volts	
Anode No. 2 Voltage	2000 Volts	
Anode No. 1 Voltage for Focus	340 to 510 Volts	
Grid No. 1 Voltage Required for Cutoff[2]	−52 to −87 Volts	
Deflection Factor		
Deflecting Plates 1-2	68 to 82 Volts	dc/Inch
Deflecting Plates 3-4	42 to 52 Volts	dc/Inch
Modulation at Ib3 = 25 μa[3]	38 Volts	dc Max.
Line Width "A" at Ib3 = 25 μa[3]	.45 mm	Max.
Line Width "B" at Ib3 = 25 μa[3]	.65 mm	Max.
Light Output at Ib3 = 25 μa[4]		
4MP1[5]	20 Ft. L.	Min.
4MP11[6]	14 Ft. L.	Min.
Deflection Factor Uniformity[3]	2 Percent	Max.
Pattern Distortion[7]	2 Percent	Max.
Undeflected Spot Position[8]	Within a 10 mm Square	
Trace Distortion[9]	.02 Inch	Max.
Useful Scan	2⅞ Inches	Min.

CIRCUIT VALUES

Grid No. 1 Circuit Resistance	1.5 Megohms Max.
Deflection Circuit Resistance[10]	1.0 Megohms Max.

NOTES:

1. *This tube is designed for optimum performance when operated at an Eb3/Eb2 ratio of 2.0. Operation of other ratios of Eb3/Eb2 may result in changes of deflection uniformity and pattern distortion.*

NOTES: (Cont'd)

2. *Visual extinction of undeflected focused spot.*
3. *Measured in accordance with MIL-E-1.*
4. *Using a raster size of 2¼ x 2¼ inches.*
5. *Using a No. 594 Photronic cell with Viscor filter (for eye correction).*
6. *Using a No. 594 Photronic cell without Viscor filter (without eye correction).*
7. *All portions of a raster, pattern adjusted so its widest points just touch the sides of 2.295 x 2.295 inch square, will fall within the area bounded by the 2.295 x 2.295 inch square and an inscribed 2.205 x 2.205 inch square.*
8. *Centered with respect to the tube face and with the tube shielded. Connect free deflection electrodes to accelerator.*
9. *A 2¼ inch long trace which is deflected and focused ± 1⅛ inch from center in both the horizontal and vertical directions, shall not deviate from straight lines by more than the indicated value.*
10. *It is recommended that the deflection electrode circuit resistances be approximately equal.*
11. *Deflecting plates D1 and D2 are nearer the screen while deflecting plates D3 and D4 are nearer the base.*

WARNING:

X-ray radiation shielding may be necessary to protect against possible danger of personal injury from prolonged exposure at close range if this tube is operated at higher than the manufacturer's Maximum Rated Anode Voltage or 16,000 volts, whichever is less.

OUTLINE

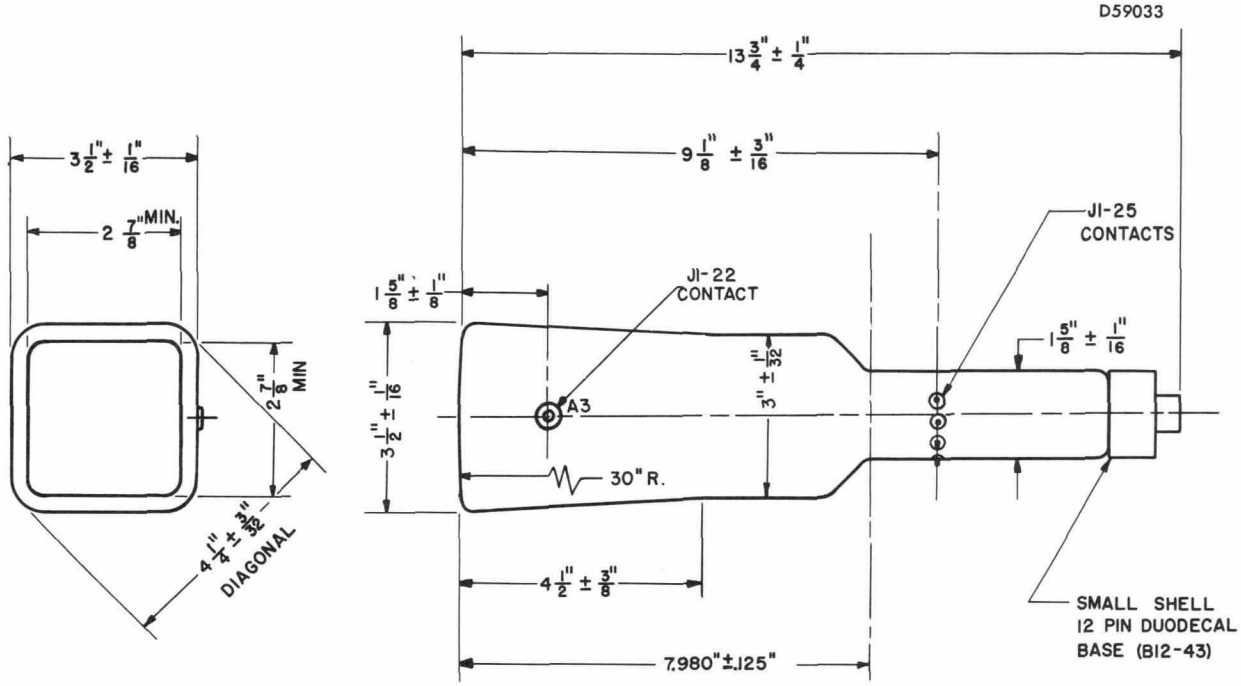

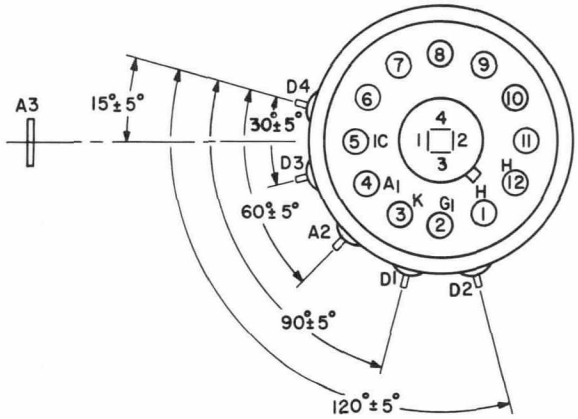

BOTTOM VIEW OF BASE