EIMAC
Division of Varian
SAN CARLOS
CALIFORNIA

4K3SJ

POWER AMPLIFIER S-BAND KLYSTRON

The EIMAC 4K3SJ is an air cooled, permanent magnet focused, power-amplifier klystron designed to operate at frequencies from 1700 to 2400 MHz. It will deliver a minimum output power of 1 kilowatt with minimum power gain of 40 decibels. The 4K3SJ is intended for use in applications where light weight and compactness are essential.

FEATURES

- PERMANENT MAGNET FOCUSING
- FOUR INTEGRAL CAVITIES
- LOW NOISE LEVEL
- FIXED INPUT AND OUTPUT COUPLING
- TWO LIFTING HANDLES FOR EASE OF HANDLING
- INSTANT FAULT RECYCLING

CHARACTERISTICS

ELECTRICAL

Frequency	1700-2400	MHz
Minimum Output Power	1	kW
Minimum Power Gain	40	db
Cathode: Impregnated Unipotential		
Starting Time	3	minutes
Heater: Voltage	6	volts
Current	4.5	amperes
Maximum Starting Current	9	amperes

(Revised 7-1-66) © 1962, 1966 Varian

Printed in U.S.A.

4K3SJ

DIMENSIONAL DATA			
REF.	NOM.	MIN.	MAX.
A			19.000
B	13.475		
C	4.544		
D			7.874
E	5.820		
F	1.470		
G	5.820		
H	4.370		
J	2.920		
K	1.470		
L			.750
M	2.472		
N	3.475		
P	7.910		
R		4.888	5.012
S		2.444	2.506
T			13.196
U			3.042
V	4.383		
AA		.248	.252
AB		.647	
AC		.340	
BA		.740	.760
BB		1.485	1.505
BC		1.450	1.490
BD		.530	
BE		.830	
BF		.450	

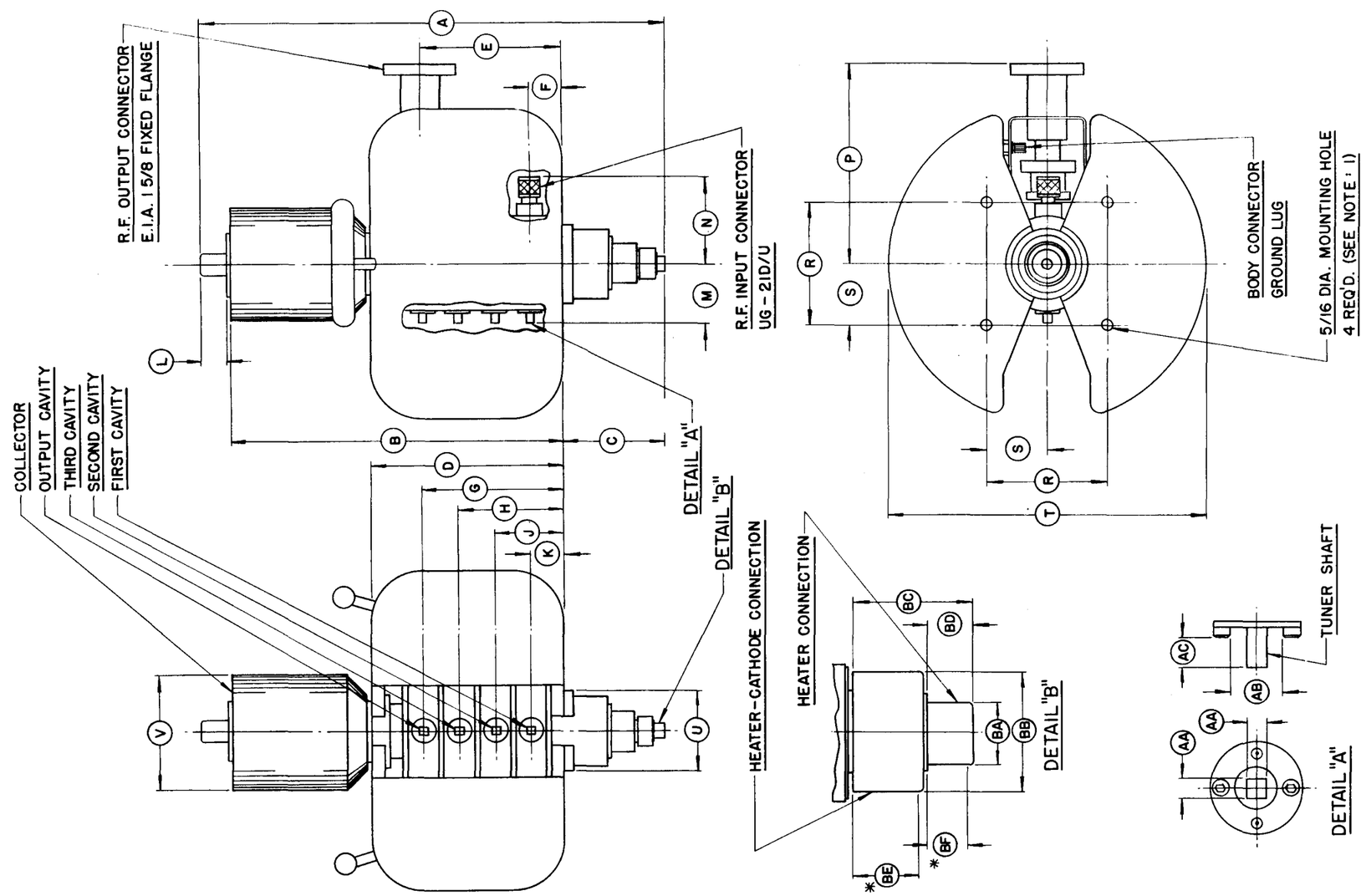

NOTES:

1. KEEP MAGNETIC MATERIALS AT LEAST SIX INCHES AWAY FROM MAGNET: OTHER MAGNETS SHOULD BE AT LEAST TWELVE INCHES DISTANT.
2. DIMENSIONS ARE IN INCHES.
3. (*) MINIMUM CONTACT.

4K3SJ KLYSTRON

MECHANICAL

Operating Position (preferred)	Vertical, cathode down
Cavity Tuning Torque (maximum)	12 inch pounds
Cooling	Forced Air (20°C at sea level)
Collector Flow	200 cfm
Collector Pressure Drop	1.5 inches H_2O

Body and cathode seals require cooling only at higher temperatures or lower pressures.

Maximum Dimensions:

Length	18.4 inches
Width	13.25 inches
Depth	14 inches

RF Input Coupling	UG-21 D/U Connector
RF Output Coupling	1⅝ inch, 50-ohm line
Weight (Klystron and Magnet)	85 pounds

MAXIMUM RATINGS

DC BEAM VOLTAGE	7.0	KILOVOLTS
DC BEAM CURRENT	0.6	AMPERE
DC BEAM INPUT POWER	4	KILOWATTS
COLLECTOR DISSIPATION	4	KILOWATTS
CATHODE SEAL TEMPERATURE	150	DEGREES C
LOAD VSWR	2:1	

TYPICAL OPERATION — TUNED FOR MAXIMUM EFFICIENCY

Frequency	1700	2000	2400	megahertz
Output Power	1.17	1.08	1.03	kilowatts
Driving Power	20	25	30	milliwatts
Gain	47.6	46.3	45.3	decibels
DC Beam Voltage	6	6	6.2	kilovolts
DC Beam Current	0.54	0.54	0.56	ampere
Beam Power Efficiency	36.2	33.4	31.8	percent
3 db Bandwidth	4	4.5	6	megahertz

For additional data or information regarding a specific application, write to EIMAC, Division of Varian, 301 Industrial Way, San Carlos, California.