CIRCUIT B

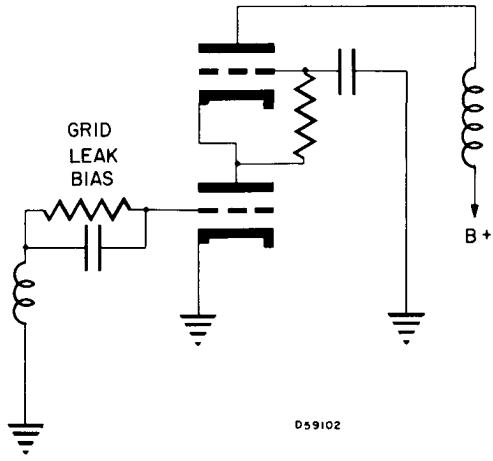

6DK6

3DK6, 4DK6, 12DK6

Color Television Type

IF AMPLIFIER

Sharp Cutoff Pentode

Construction .....Miniature T-5½
Base .....Button 7 Pin, E7-1
Basing 7CM
Outline 5-2
Maximum Diameter .....0.750 In.
Maximum Seated Height .....1.875 In.
Maximum Overall Height .....2.125 In.

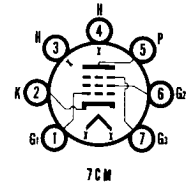

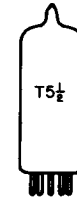

ELECTRICAL DATA

HEATER OPERATION

	12DK6	4DK6	3DK6	6DK6
Heater Voltage	12.6	4.2	3.15	6.3 Volts
Heater Current	150	450	600	300 Ma
Heater Warm-up Time	—	11	11	— Seconds
Maximum Heater-Cathode Voltage				
Heater Negative with Respect to Cathode				
DC Component	—	200	200	— Volts
Total DC and Plate	200	300	300	200 Volts
Heater Positive with Respect to Cathode				
DC	100	100	100	100 Volts
Total DC and Peak	200	200	200	200 Volts

DIRECT INTERELECTRODE CAPACITANCES (Unshielded)

Grid No. 1 to Plate (Max.) ..... 0.025 Pf
Input ..... 6.3 Pf
Output ..... 1.9 Pf

RATINGS (Design Maximum Rating System)

Plate Voltage (Max.) ..... 330 Volts
Grid No. 2 Supply Voltage (Max.) ..... 330 Volts
Grid No. 2 Voltage .....See Rating Chart (Gen. Info. Sec.)
Plate Dissipation (Max.) ..... 2.3 Watts
Grid No. 2 Dissipation (Max.) ..... 0.55 Watt
Positive Grid No. 1 Voltage (Max.) ..... 0 Volt

CHARACTERISTICS AND TYPICAL OPERATION

Plate Voltage ..... 125 Volts
Grid No. 3 Voltage (Suppressor) .....Connected to Cathode at Socket
Grid No. 2 Voltage ..... 125 Volts
Cathode Bias Resistor ..... 56 Ohms
Plate Current ..... 12.0 Ma
Grid No. 2 Current ..... 3.8 Ma
Transconductance ..... 9800 μmhos
Plate Resistance ..... 0.35 Megohm
Grid No. 1 Bias for Ib of 20 μa (Approx.) ..... –6.5 Volts

VERTICAL DEFLECTION OSCILLATOR and AMPLIFIER

6DN7

Double Dissimilar Triode

Construction .....Octal T-9
Base .....Octal 8 Pin, B8-142
Basing 8BD
Outline
Maximum Diameter .....1.188 In.
Maximum Seated Height .....2.438 In.
Maximum Overall Height .....3.000 In.

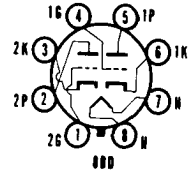

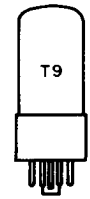

ELECTRICAL DATA

HEATER OPERATION

Heater Voltage	6.3 Volts
Heater Current	900 Ma
Maximum Heater-Cathode Voltage	
Heater Positive with Respect to Cathode	
DC Component	100 Volts
Total DC and Peak	200 Volts
Heater Negative with Respect to Cathode	
Total DC and Peak	200 Volts

DIRECT INTERELECTRODE CAPACITANCES (Unshielded)

	Section 1	Section 2
Grid to Plate	4.0	5.5 Pf
Input	2.2	4.6 Pf
Output	0.7	1.0 Pf

RATINGS (Design Maximum Rating System)

	Vertical Oscillator Service (Section 1)(1)	Vertical Deflection Service (Section 2)(1)
DC Plate Voltage (Max.)	350	550 Volts
Peak Positive Pulse Plate Voltage (Max.)	—	2500 Volts
Peak Negative Grid Voltage (Max.)	400	250 Volts
Plate Dissipation (Max.)	1.0	10(2) Watts
DC Cathode Current (Max.)	—	50 Ma
Peak Cathode Current (Max.)	—	150 Ma
Grid Circuit Resistance		
With Fixed Bias (Max.)	2.2	2.2 Megohms
With Cathode Bias (Max.)	2.2	— Megohms

CHARACTERISTICS AND TYPICAL OPERATION

	Section 1 (Oscillator)	Section 2 (Amplifier)
Plate Voltage	250	150 250 Volts
Grid Voltage	-8.0	0(3) -9.5 Volts
Amplification Factor	22.5	— 15.4
Plate Resistance (Approx.)	9000	— 2000 Ohms
Transconductance	2500	— 7700 μmhos
Plate Current	8.0	68 41 Ma
Grid Voltage (Approx.)		
Ib = 10 μa	-18	— -22 Volts
Ib = 50 μa	—	— -23 Volts

NOTES:

(1) For operation in a 525 line, 30 frame system as described in "Standards of Good Engineering Practice for Television Broadcast Stations; Federal Communications Commission," the duty cycle of the voltage pulse must not exceed 15% of one horizontal scanning cycle.
(2) In stages operating with grid-leak bias, an adequate cathode-bias resistor or other suitable means is required to protect the tube in the absence of excitation.
(3) Applied for short interval (two seconds maximum) so as not to damage tube.