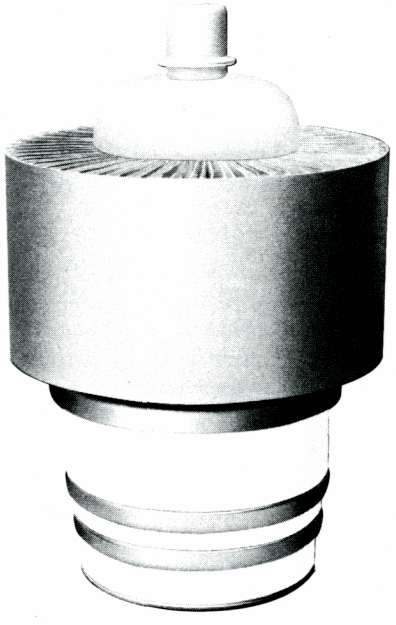

TECHNICAL DATA

4CX7500A VHF RADIAL BEAM POWER TETRODE

The EIMAC 4CX7500A is a compact ceramic/metal radial beam power tetrode intended for use in VHF power amplifier applications. It features a type of internal mechanical structure which results in high rf operating efficiency. Low rf losses in this structure permit operation at full ratings to 220 MHz. A dense mesh filament is used which contributes to the high performance capability.

The 4CX7500A has a gain of over 20 dB in FM broadcast service, and is also recommended for rf linear power amplifier service and for VHF-TV linear amplifier service. The anode is rated for 7500 watts of dissipation with forced air cooling.

GENERAL CHARACTERISTICS[1]

ELECTRICAL

Filament: Thoriated Tungsten Mesh		
Voltage	7.0 ± 0.35	V
Current, at 7.0 volts	110	A
Amplification Factor, average		
Grid to Screen	4.5	
Direct Interelectrode Capacitances (cathode grounded)[2]		
Cin	145	pF
Cout	20	pF
Cgp	0.5	pF
Direct Interelectrode Capacitances (grids grounded)[2]		
Cin	74.1	pF
Cout	20.6	pF
Cpk	0.065	pF
Maximum Frequency for Full Ratings (CW)	220	MHz

[1]Characteristics and operating values are based on performance tests. These figures may change without notice as the result of additional data or product refinement. Varian Power Grid & X-Ray Tube Products should be consulted before using this information for final equipment design.

[2]Capacitance values are for a cold tube as measured in a special shielded fixture in accordance with Electronic Industries Association Standard RS-191.

394625 (Effective April 1985) VA4807 2216

Printed in U.S.A.

varian

power grid & x-ray tube products

301 Industrial Way / San Carlos, CA 94070 / U.S.A. / (415) 592-1221

MECHANICAL

Maximum Overall Dimensions:	
Length	8.72 In; 21. 5 cm
Diameter	5.66 In; 14.4 cm
Net Weight (approximate)	7.7 Lbs; 3.5 kg
Operating Position	Axis Vertical, Base Up or Down
Cooling	Forced Air
Maximum Operating Temperature, Ceramic/Metal Seals & Anode Core	250°C
Base	Special, Coaxial
Recommended Air-System Socket	HF: EIMAC SK-340
	VHF: EIMAC SK-350
Available Screen Grid Bypass Capacitor Kit for SK-350 or SK-360 (8000 pF @ 5000 DCWV)	EIMAC SK-355
Recommended Air-System Chimney (for SK-350 or SK-360)	EIMAC SK-346
Recommended EIMAC Cavity Assembly for FM Broadcast Service	CV-2228
Available Anode Connector Clip	EIMAC ACC-3

RADIO FREQUENCY POWER AMPLIFIER
Class C Telegraphy or FM
(Key-down Conditions)

ABSOLUTE MAXIMUM CONDITIONS

DC PLATE VOLTAGE	7500	VOLTS
DC SCREEN VOLTAGE	1500	VOLTS
DC GRID VOLTAGE	-500	VOLTS
DC PLATE CURRENT	3.0	AMPERES
PLATE DISSIPATION	7500	WATTS
SCREEN DISSIPATION	165	WATTS
GRID DISSIPATION	50	WATTS

TYPICAL OPERATION
(Measured data in EIMAC CV2228 FM cavity at 100.5 MHz)

Plate Voltage	6.5	6.5	6.5	kVdc
Screen Voltage	635	750	750	Vdc
Grid Voltage	-460	-275	-400	Vdc
Plate Current	2.1	2.2	2.4	Adc
Screen Current	195	128	140	mAdc
Grid Current	185	90	95	mAdc
Driving Power	247	100	130	W
Efficiency	79.3	77.6	77.0	%
Useful Output Power	10.8	11.1	12.1	kW
Power Gain	16	20	19.7	dB

RADIO FREQUENCY LINEAR AMPLIFIER
Class AB1

ABSOLUTE MAXIMUM RATINGS

DC PLATE VOLTAGE	7500	VOLTS
DC SCREEN VOLTAGE	1500	VOLTS
DC GRID VOLTAGE	-500	VOLTS
DC PLATE CURRENT	3.0	AMPERES
PLATE DISSIPATION	7500	WATTS
SCREEN DISSIPATION	165	WATTS
GRID DISSIPATION	50	WATTS

* Approximate Value
** Adjust to specified zero-signal plate current
\# PEP output or rf power at crest of modulation envelope
§ Referenced against one tone of a two equal-tone signal

Typical Operation, Peak Envelope or Modulation Crest Conditions (frequencies below 30 MHz)

Plate Voltage	7500	Vdc
Zero Signal Plate Current	750	mAdc
Max. Signal Plate Current	2.2	Adc
Screen Voltage	1250	Vdc
Screen Current*	95	mAdc
Grid Bias Voltage**	-190	Vdc
Grid Current*	0	mAdc
Useful Power Out#,##	10	kW
Driving Power*	0	W
Intermodulation Distortion Products§		
3rd Order Products	-32	dB
5th Order Products	-44	dB

##Delivered to the load

TYPICAL OPERATION values are obtained by measurement or by calculation from published characteristic curves. To obtain the specified plate current at the specified bias, screen, and plate voltages, adjustment of the rf grid voltage is assumed. If this procedure is followed, there will be little variation in output power when the tube is replaced, even though there may be some variation in grid and screen currents. The grid and screen currents which occur when the desired plate current is obtained are incidental and vary from tube to tube. These current variations cause no performance degradation providing the circuit maintains the correct voltage in the presence of the current variations.

APPLICATION

MECHANICAL

MOUNTING - The 4CX7500A must be mounted with its axis vertical, base up or down at the convenience of the equipment designer, and should be protected from shock and vibration which could damage the internal structure of the tube.

AIR-SYSTEM SOCKET & CHIMNEY - The EIMAC sockets type SK-340 and SK-350 are designed especially for the concentric base terminals of the 4CX7500A. The SK-340 is intended for use at HF, while the SK-350 is recommended for VHF applications. The SK-346 chimney is intended for use with either. Use of the recommended air flow rates through either socket will provide effective forced-air cooling of the tube. Air forced into the bottom of the socket passes over the tube terminals and through the chimney and into the anode cooling fins.

COOLING - Forced-air cooling is required in all applications. The blower selected in a given application must be capable of supplying the desired air flow at a back pressure sufficient for the tube, plus any drop caused by ducts and filters. Air flow must be applied before or simultaneously with filament voltage.

Minimum air flow requirements for a maximum anode temperature of 225°C for various altitudes and dissipation levels are listed. The pressure drop values shown are approximate and are for the SK-340/tube/SK-346 combination. If an SK-350 is used air passages in addition to those in the socket may be required for low pressure drop.

Inlet Air Temperature = 25°C

Sea Level	Plate Diss. Watts	Flow Rate CFM	Press. Drop In. Water
	5000	192	1.0
	7500	414	4.3

5000 Feet	Plate Diss. Watts	Flow Rate CFM	Press. Drop In. Water
	5000	232	1.2
	7500	501	5.1

10,000 Feet	Plate Diss. Watts	Flow Rate CFM	Press. Drop In. Water
	5000	281	1.4
	7500	607	6.1

Inlet Air Temperature = 35°C

Sea Level	Plate Diss. Watts	Flow Rate CFM	Press. Drop In. Water
	5000	220	1.25
	7500	476	5.42

5000 Feet	Plate Diss. Watts	Flow Rate CFM	Press. Drop In. Water
	5000	268	1.5
	7500	576	6.5

10,000 Feet	Plate Diss. Watts	Flow Rate CFM	Press. Drop In. Water
	5000	324	1.75
	7500	6.98	7.75

Inlet Air Temperature = 50°C

Sea Level	Plate Diss. Watts	Flow Rate CFM	Press Drop In. Water
	5000	280	1.8
	7500	592	7.9

5000 Feet	Plate Diss. Watts	Flow Rate CFM	Press Drop In. Water
	5000	332	2.1
	7500	717	9.4

10,000 Feet	Plate Diss. Watts	Flow Rate CFM	Press. Drop In. Water
	5000	402	2.5
	7500	868	11.3

With operation at plate dissipation below 5.0 kW and lower air flow inherent with that operation, special attention is required for cooling the center of the stem (base), by means of special directors or some other provision. Temperature measurements in this area should be made, as well as the anode seal areas, during development of the equipment. Temperature-sensitive paints are available for this purpose, and Application Bulletin #20 titled TEMPERATURE MEASUREMENTS WITH EIMAC POWER TUBES is available from Varian Power Grid & X-Ray Tube Products on request.

An air interlock system should be incorporated in the design to automatically remove all voltages from the tube in case of even a partial failure of the tube cooling air.

It is considered good engineering practice to supply more than the minimum required cooling air, to allow for variables such as dirty air filters, rf seal heating, and dirty anode cooling fins if the tube has been in service for some time.

ELECTRICAL

ABSOLUTE MAXIMUM RATINGS - Values shown for each type of service are based on the "absolute system" and are not to be exceeded under any service conditions. These ratings are limiting values outside

which the serviceability of the tube may be impaired. In order not to exceed absolute ratings the equipment designer has the responsibility of determining an average design value for each rating below the absolute value of that rating by a safety factor so that the absolute values will never be exceeded under any usual conditions of supply-voltage variation, load variation, or manufacturing variation in the equipment itself. It does not necessarily follow that combinations of absolute maximum ratings can be attained simultaneously.

FILAMENT OPERATION - At rated (nominal) filament voltage the peak emission capability of the tube is many times that needed for communication service. A reduction in filament voltage will lower the filament temperature, which will substantially increase life expectancy. The correct value of filament voltage should be determined for the particular application. It is recommended the tube be operated at full nominal voltage for an initial stabilization period of 100 to 200 hours before any action is taken to operate at reduced voltage. The voltage should gradually be reduced until there is a slight degradation in performance (such as power output or distortion). The filament voltage should then be increased a few tenths of a volt above the value where performance degradation was noted. The operating point should be rechecked after 24 hours. Filament voltage should be closely regulated when voltage is to be reduced in this manner, to avoid any adverse influence by normal line voltage variations. Filament voltage should be measured at the tube base or socket, using an accurate rms-responding meter. Periodically the procedure outlined above for reduction of voltage should be repeated, with voltage reset as required, to assure best life.

GRID OPERATION - The maximum control grid dissipation is 50 watts, determined approximately by the product of the dc grid current and the peak positive grid voltage.

SCREEN OPERATION - The maximum screen grid dissipation is 165 watts. With no ac applied to the screen grid, dissipation is simply the product of dc screen voltage and the dc screen current. With screen modulation, dissipation is dependent on rms screen voltage and rms screen current. Plate voltage, plate loading, or bias voltage must never be removed while filament and screen voltages are present, since screen dissipation ratings will be exceeded. A protective spark-gap device should be connected between the screen grid and the cathode to guard against excessive voltage.

SCREEN CURRENT - The screen current may reverse under certain conditions and produce negative indications on the screen current meter. This is a normal characteristic of most tetrodes. The screen power supply should be designed with this characteristic in mind, so that the correct operating voltage will be maintained on the screen under all conditions. A current path from the screen to cathode must be provided by a bleeder resistor or a shunt regulator connected between screen and cathode and arranged to pass approximately 10% of the average screen current per connected tube. A series regulated power supply can be used only when an adequate bleeder resistor is provided.

FAULT PROTECTION - In addition to the normal plate over-current interlock, screen current interlock, and air-flow interlock, the tube must be protected from internal damage caused by an internal plate arc which may occur at high plate voltage. A protective resistance should always be connected in series with each tube anode, to absorb power supply stored energy if an internal arc should occur. EIMAC's Application Bulletin #17 titled FAULT PROTECTION contains considerable detail, and is available on request.

HIGH VOLTAGE - Normal operating voltages used with this tube are deadly, and the equipment must be designed properly and operating precautions must be followed. Design all equipment so that no one can come in contact with high voltages. All equipment must include safety enclosures for high-voltage circuits and terminals, with interlock switches to open primary circuits of the power supply and to discharge high-voltage capacitors whenever access doors are opened. Interlock switches must not be bypassed or "cheated" to allow operation with access doors open. Always remember that **HIGH VOLTAGE CAN KILL.**

RADIO-FREQUENCY RADIATION - Avoid exposure to strong rf fields even at relatively low frequency. Absorption of rf energy by human tissue is dependent on frequency. Under 300 MHz most of the energy will pass completely through the human body with little attenuation or heating affect. Public health agencies are concerned with the hazard even at these frequencies. OSHA (Occupational Safety and Health Administration) recommends that prolonged exposure to rf radiation should be limited to 10 milliwatts per square centimeter.

INTERELECTRODE CAPACITANCE - The actual internal interelectrode capacitance of a tube is influenced by many variables in most applications, such as stray capacitance to the chassis, capacitance added by the socket used, stray capacitance between tube terminals, and wiring effects. To control the actual capacitance values within the tube, as the key component involved, the industry and Military Services use a standard test procedure as described in Electronic Industries Association Standard RS-191. This requires the use of specially constructed test fixtures which effectively shield all external tube leads from each other and eliminates any capacitance reading to "ground." The test is performed on a cold tube. Other factors being equal, controlling internal tube capacitance in this way normally assures good interchangeability of tubes over a period of time. The capacitance values shown here are taken in accordance with Standard RS-191. The equipment designer is therefore cautioned to make allowance for the actual capacitance values which will exist in any normal application. Measurements should be taken with the socket and mounting which represent approximate final layout if capacitance values are highly significant in the design.

SPECIAL APPLICATIONS - When it is desired to operate this tube under conditions widely different from those listed here, write to Varian Power Grid & X-Ray Tube Products, Attn: Product Manager; 301 Industrial Way; San Carlos, CA 94070 U.S.A.

OPERATING HAZARDS

PROPER USE AND SAFE OPERATING PRACTICES WITH RESPECT TO POWER TUBES ARE THE RESPONSIBILITY OF EQUIPMENT MANUFACTURERS AND USERS OF SUCH TUBES. ALL PERSONS WHO WORK WITH OR ARE EXPOSED TO POWER TUBES OR EQUIPMENT WHICH UTILIZES SUCH TUBES MUST TAKE PRECAUTIONS TO PROTECT THEMSELVES AGAINST POSSIBLE SERIOUS BODILY INJURY. DO NOT BE CARELESS AROUND SUCH PRODUCTS.

The operation of this tube may involve the following hazards, any one of which, in the absence of safe operating practices and precautions, could result in serious harm to personnel:

a. HIGH VOLTAGE - Normal operating voltages can be deadly. Remember that HIGH VOLTAGE CAN KILL.

b. LOW-VOLTAGE HIGH-CURRENT CIRCUITS - personal jewelry, such as rings, should not be worn when working with filament contacts or connectors as a short circuit can produce very high current and melting, resulting in severe burns.

c. RF RADIATION - Exposure to strong rf fields should be avoided, even at relatively low frequencies. The dangers of rf radiation are more severe at UHF and microwave frequencies and can cause serious bodily and eye injuries. CARDIAC PACEMAKERS MAY BE AFFECTED.

d. HOT SURFACES - Surfaces of tubes can reach temperatures of several hundred °C and cause serious burns if touched for several minutes after all power is removed.

Please review the detailed operating hazards sheet enclosed with each tube, or request a copy from: Varian Power Grid & X-Ray Tube Products, Power Grid Application Engineering, 301 Industrial Way, San Carlos, CA 94070.

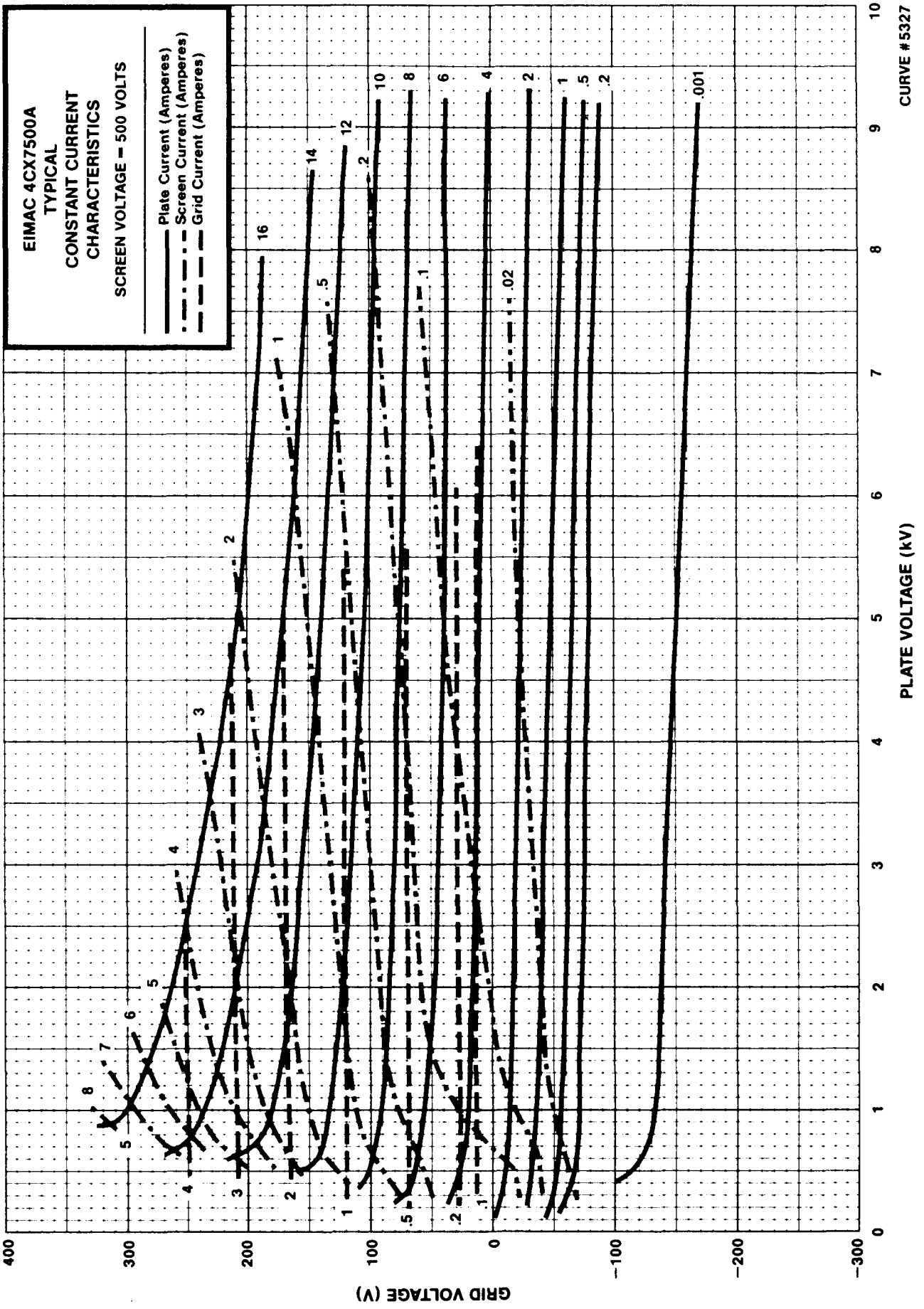
EIMAC 4CX7500A
TYPICAL
CONSTANT CURRENT
CHARACTERISTICS
SCREEN VOLTAGE = 500 VOLTS
Plate Current (Amperes)
Screen Current (Amperes)
Grid Current (Amperes)
CURVE #5327
PLATE VOLTAGE (kV)
GRID VOLTAGE (V)
0
1
2
3
4
5
6
7
8
9
10
400
300
200
100
0
−100
−200
−300
16
14
12
10
8
6
4
2
1
.5
.2
.001
.02
.1

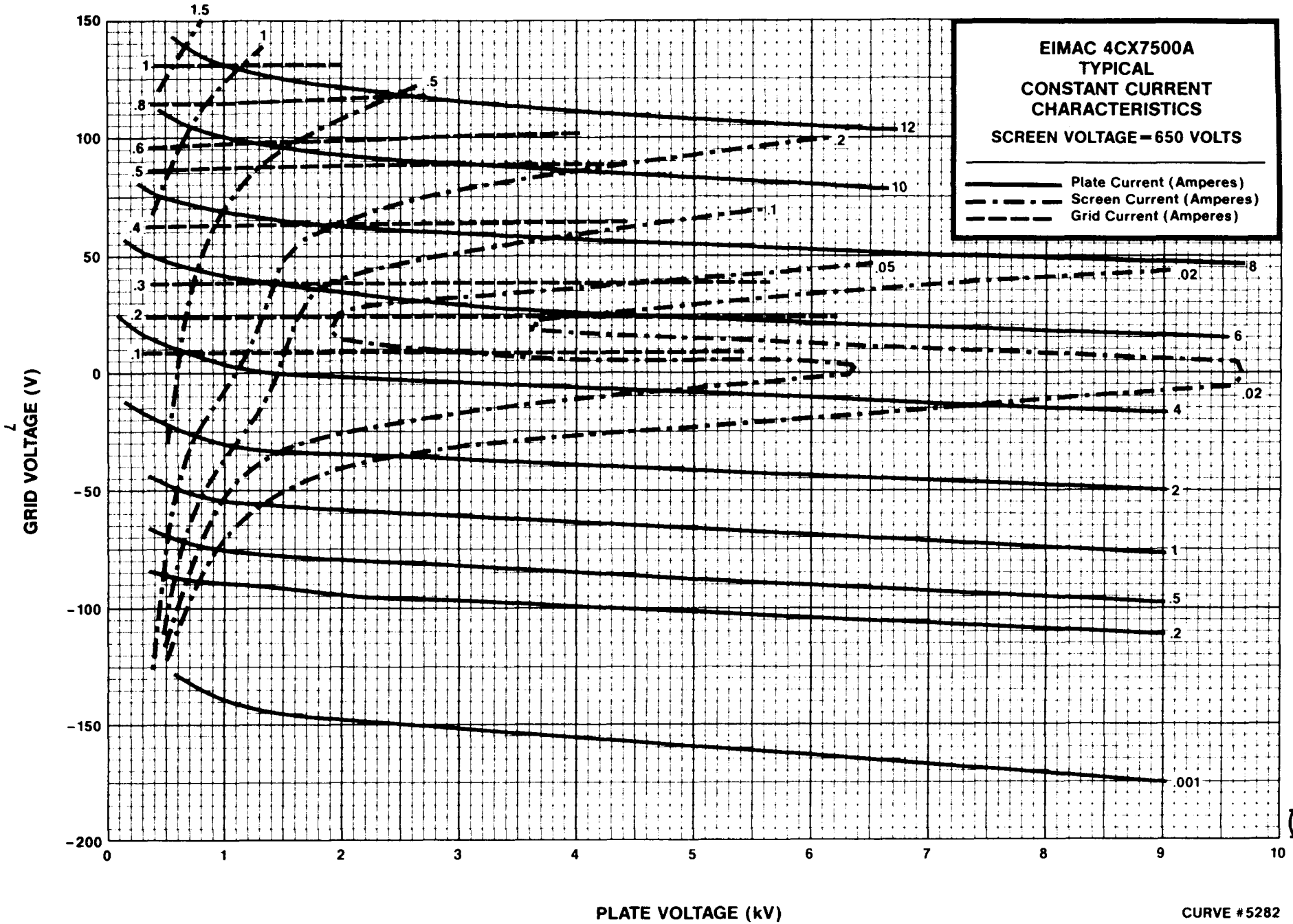

4CX7500A

CURVE #5282

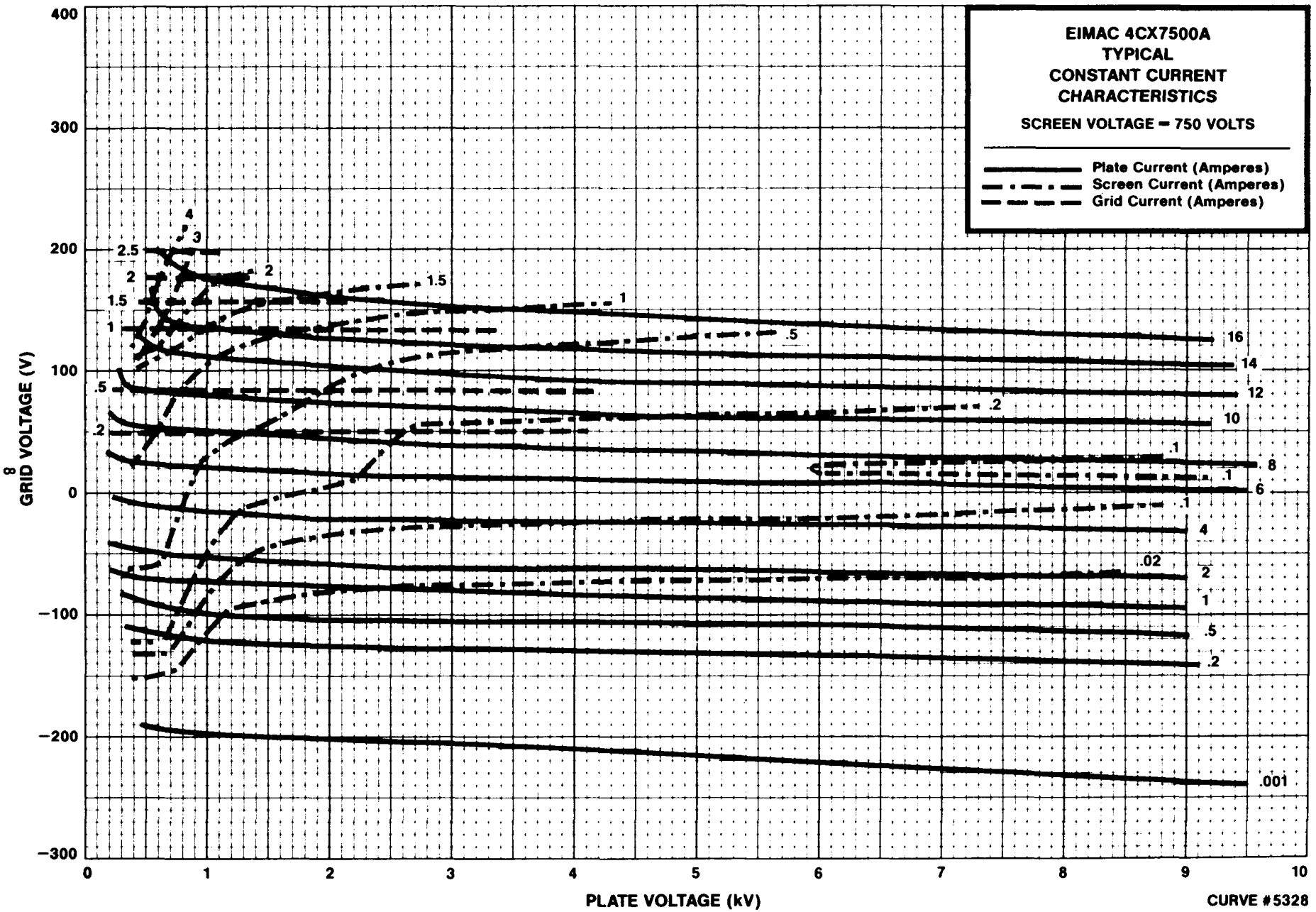
EIMAC 4CX7500A
TYPICAL
CONSTANT CURRENT
CHARACTERISTICS
SCREEN VOLTAGE = 750 VOLTS
Plate Current (Amperes)
Screen Current (Amperes)
Grid Current (Amperes)
GRID VOLTAGE (V)
PLATE VOLTAGE (kV)
400
300
200
100
0
−100
−200
−300
0
1
2
3
4
5
6
7
8
9
10
16
14
12
10
8
6
4
2
1
.5
.2
.001
.02
.1
.2
.5
1
1.5
2
2.5
3
4

CURVE #5328

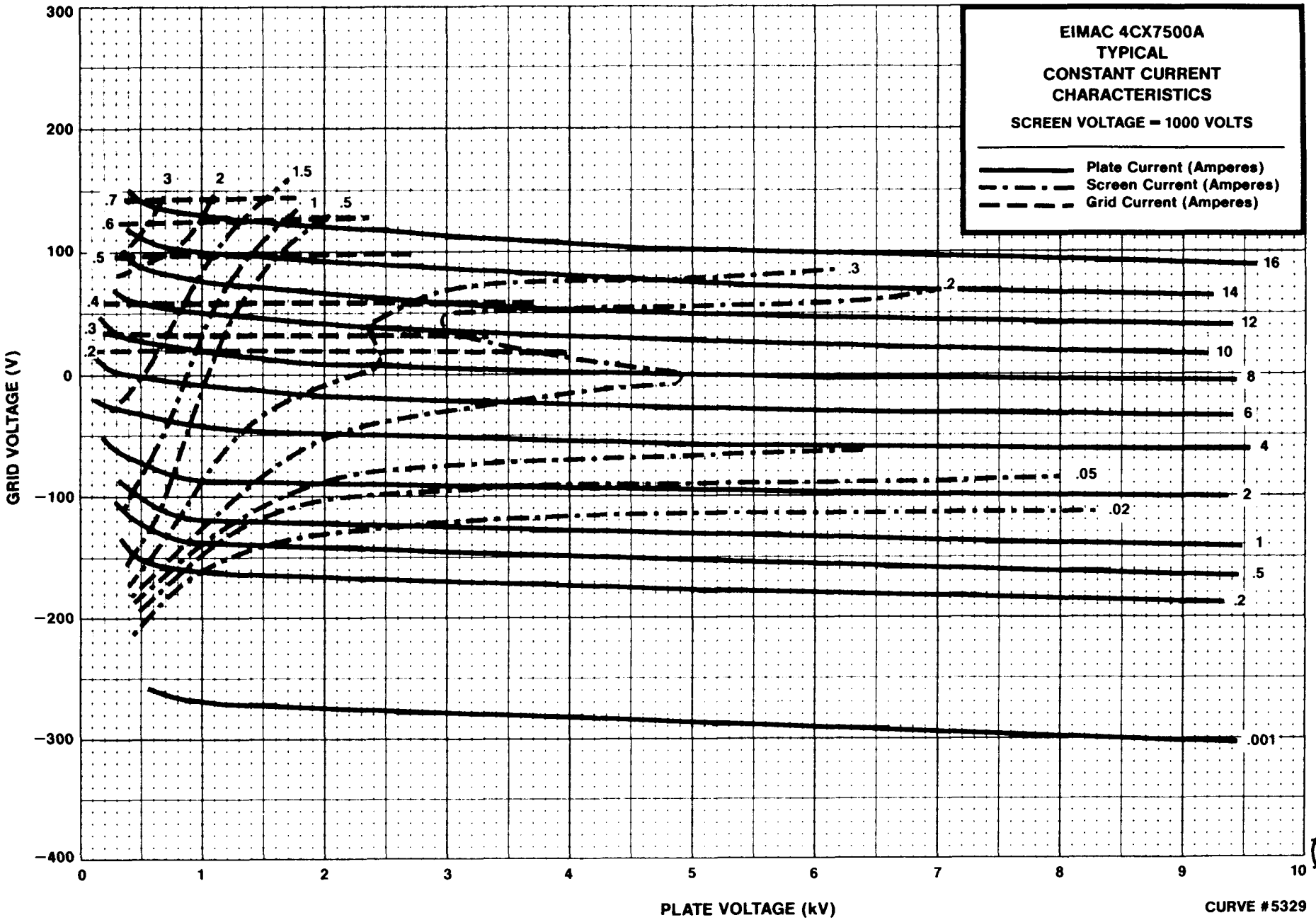

CURVE #5329

4CX7500A

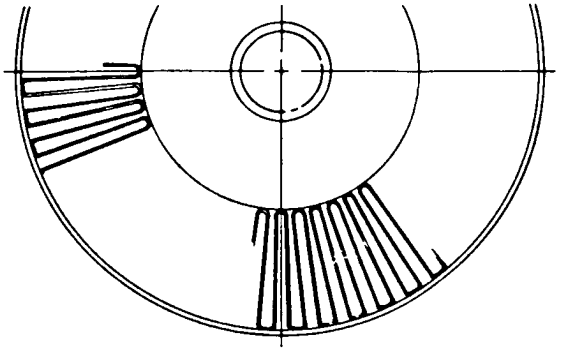

DIMENSIONAL DATA						
	INCHES			MILLIMETERS		
DIM.	MIN.	MAX.	REF.	MIN.	MAX.	REF.
A	5.539	5.663		140.69	143.84	
B	.855	.895		21.72	22.73	
C	.600	.760		15.24	19.30	
D	1.896	1.936		48.16	49.17	
E	3.133	3.173		79.58	80.59	
F	3.792	3.832		96.32	97.32	
G	3.980	4.020		101.09	102.11	
H	.188			4.78		
J	.188			4.78		
K	.188			4.78		
L	3.863	4.210		97.43	106.93	
M	2.812	3.187		71.42	80.95	
N	8.469	8.718		215.11	246.86	
P	.375			9.53		
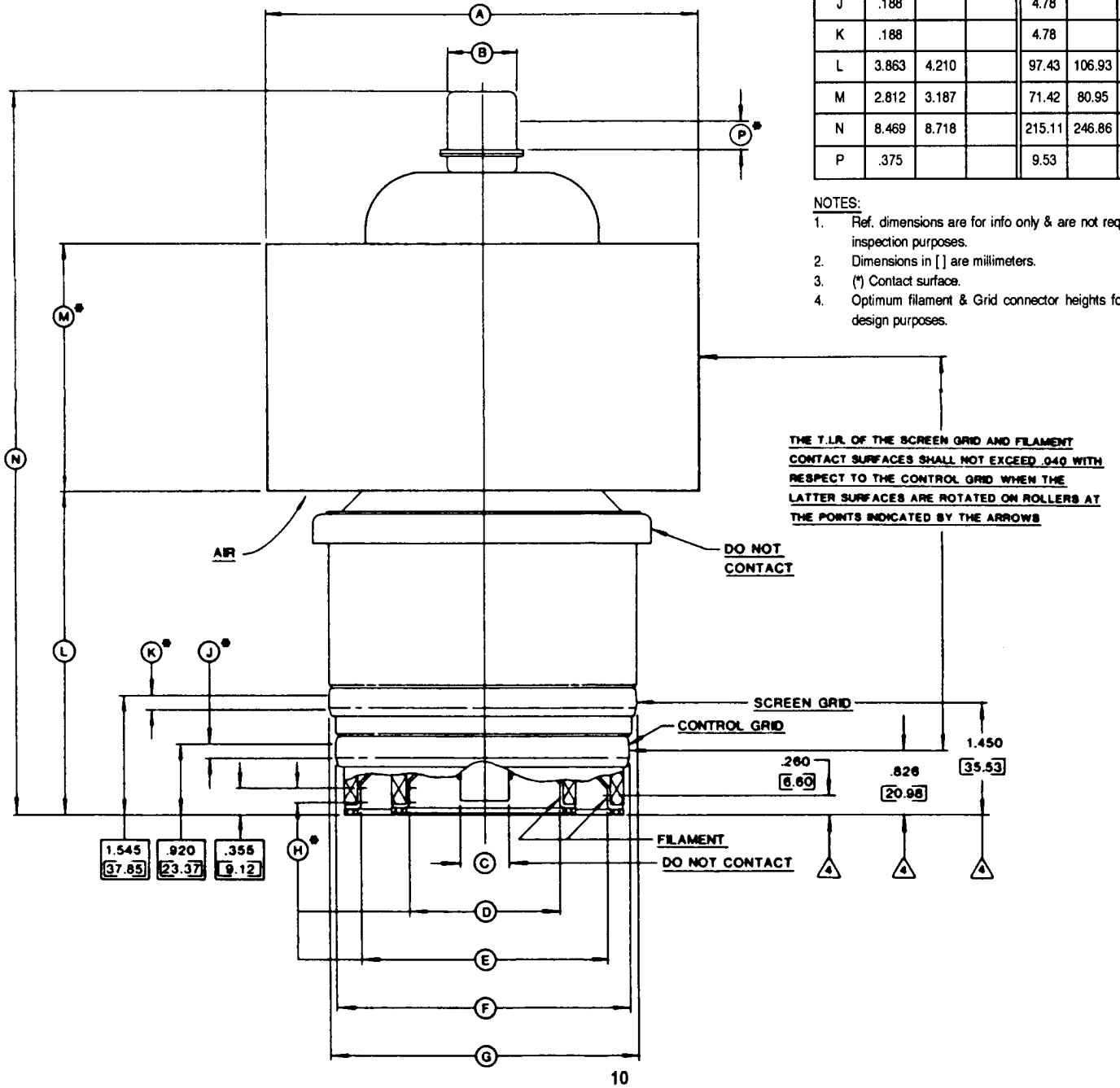
NOTES:
1. Ref. dimensions are for info only & are not required for inspection purposes.
2. Dimensions in [ ] are millimeters.
3. (*) Contact surface.
4. Optimum filament & Grid connector heights for socket design purposes.