Svetlana 4CX7500A Radial Beam Power Tetrode

The Svetlana™ 4CX7500A is designed for audio and radio frequency applications. The Svetlana 4CX7500A has a directly-heated thoriated tungsten mesh filament for mechanical ruggedness, good VHF electrical performance and high RF efficiency.

The Svetlana 4CX7500A is manufactured in the Svetlana factory in St. Petersburg, Russia, and is designed to be directly interchangeable with the 4CX7500A manufactured in the United States.

Svetlana SM
ELECTRON DEVICES

Svetlana 4CX7500A

General Characteristics

Electrical

Filament:	Thoriated tungsten mesh
Voltage	7.0 ± 0.35V
Current, at 7.0 Volts	110 A
Amplification factor (average):	
Grid to screen	4.5
Direct interelectrode capacitances (grounded cathode):	
Cin	145 pF
Cout	20 pF
Cgp	0.5 pF
Direct interelectrode capacitances (grids grounded):	
Cin	74.1 pF
Cout	20.6 pF
Cpk	0.065 pF
Maximum frequency for full ratings (CW)	220 MHz

Mechanical

Maximum overall dimensions:	
Length	246.9 mm (9.72 in.)
Diameter	143.8 mm (5.66 in.)
Net weight*	3.5 kg (7.7 lb)
Operating position	Axis vertical, base up or down
Maximum operating temperature, ceramic/metal seals or envelope	250° C
Cooling	Forced air
Base	Coaxial, designed for use with SK340 (HF) or SK350 (VHF) sockets
Recommended chimney	For SK340 or SK350 use SK346 (VHF)
Anode connector	Svetlana AC-3

Radio Frequency Power Amplifier Class C FM or Telegraphy

Absolute maximum ratings

DC plate voltage	7500	V
DC screen voltage	1500	V
DC grid voltage	-500	V
DC plate current	3.0	A
Plate dissipation	7500	W
Screen dissipation	165	W
Grid dissipation	50	W

Typical Operation

(Frequencies to 110 MHz)				
DC plate voltage	6500	6500	6500	V
DC screen voltage	635	750	750	V
DC grid voltage	-460	-275	-400	V
DC plate current	2.1	2.2	2.4	A
DC screen current*	195	128	140	mA
DC grid current*	185	90	95	mA
Driving power	247	100	130	W
Efficiency	79	77	77	%
Useful output power	10,800	11,100	12,100	W

* Approximate values

Notes: Capacitance values are for a cold tube as measured in a special shielded fixture.

Radio Frequency Linear Amplifier, Class AB1

Maximum:

DC plate voltage	*7500*	*V*
DC screen voltage	*1500*	*V*
DC grid voltage	*-500*	*V*
DC plate current	*3.0*	*A*
Plate dissipation	*7500*	*W*
Screen dissipation	*165*	*W*
Grid dissipation	*50*	*W*

Typical Operation, Peak Envelope or Modulation Peak Conditions (frequencies below 30 MHz)

Plate voltage	*7500*	*VVdc*
Zero signal plate current	*750*	*mAdc*
Max. signal plate current	*2.2*	*Adc*
Screen voltage	*1250*	*Vdc*
*Screen current**	*95*	*mAdc*
*Grid bias voltage***	*-190*	*Vdc*
*Grid current**	*0*	*mAdc*
*Useful power out****	*10*	*kW*
*Driving power**	*0*	*W*
*Intermodulation Distortion Products*****		
3rd Order products	*-32*	*dB*
5th Order products	*-44*	*dB*

** Approximate values ** Adjust to specified zero-signal plate current*

**** PEP output or rf power at crest of modulation envelope delivered to load*

***** Referenced against one tone of a two equal tone signal*

Svetlana 4CX7500A

Svetlana 4CX7500A Outline Drawing

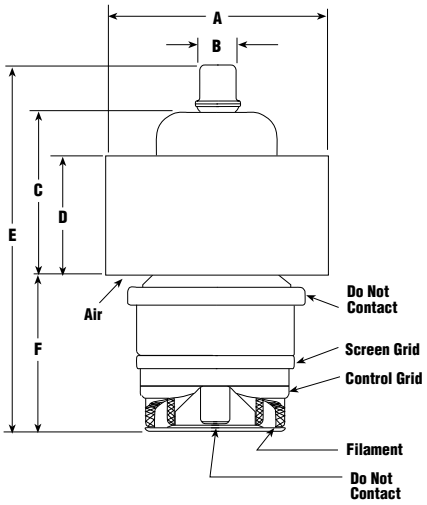

Dimensional Data

Dim.	Millimeters		Inches	
	Min.	Max.	Min.	Max.
A	140.7	143.8	5.54	5.66
B	21.7	22.7	0.854	0.894
C	117.7	140.0	4.63	5.51
D	71.4	81.0	2.81	3.19
E	215.1	246.9	8.47	9.72
F	97.4	106.9	3.84	4.21

Electrical Application

Plate operation The rated maximum plate dissipation of the 4CX7500A is 7500 Watts. This power may be safely sustained with adequate air cooling. The tube must be protected from damage which may be caused by an internal arc occurring at high plate voltage. A protective resistance should always be connected in series with each tube anode to help absorb power-supply stored energy if an internal arc should occur.

Control-grid operation The maximum control grid dissipation is 50 Watts, determined (approximately) by the product of the dc grid current and the peak positive grid voltage.

Screen-grid operation The maximum screen grid dissipation is 165 Watts. With no ac applied to the screen grid, dissipation is the product of dc screen voltage and the dc screen current. Plate voltage, plate loading or bias voltage must never be removed while filament and screen voltages are present.

The screen current may reverse under certain conditions and produce negative indications on the screen current meter. This is a normal characteristic of most tetrodes. The screen power supply should be designed with this characteristic in mind, so that the correct operating voltage will be emaintained on the screen under all conditions. A current path from the screen to cathode must be provided by a bleeder resistor or a shunt regualtor connected between screen and cathode and arranged to pass approximately 10% of the average screen current per connected tube. A series regulated power supply can be used only when an adequate bleeder resistor is provided.

Filament operation Svetlana recommends that a new tube, or a tube which has been in storage for some period of time, be operated with only filament voltage applied for a period of from 30 to 60 minutes before full operation begins. Once normal operation has been established, a minimum filament warm-up time of four to five seconds is sufficient for full filament emission. Filament voltage should be measured at the socket.

At rated nominal filament voltage, the peak emission capability of the tube is many times that needed for communication service. A reduction in filament voltage will lower the filament temperature, and this reduction will substantially increase life expectancy. The correct value of filament voltage should be determined for the particular applications. Svetlana recommends that the tube be operated at full nominal voltage for an initial stabilization period of 100 to 200 hours before any action is taken to operate at reduced voltage. The voltage should gradually be reduced until there is a slight degradation in performance—such as power output or distortion. The voltage should then be increased a few tenths of a Volt above the value where performance degradation was first noted. The operating point should be rechecked after 24 hours.

Mechanical Application

Mounting The Svetlana 4CX7500A must be mounted vertically, base up or down. The tube should be protected from vibration and shock.

Storage If the 4CX7500A is to be stored as a spare, it should be kept in its original packaging to minimize the possibility of handling damage.

Cooling The 4CX7500A requires forced-air cooling in all applications. The tube socket should be mounted in a pressurized compartment so that the cooling air passes through the socket and is guided to the anode cooling fins by an air chimney. If cooling air is not passed around the base of the tube and through the socket, arrangements must be made to assure adequate cooling of the tube base and socket contacts. An air interlock system should be provided to remove all voltages, including filament voltage, from the tube for partial or full failure of the air system.

Adequate movement of cooling air around the base of the tube keeps the tube base and the socket contact fingers at safe operating temperatures.

Although the maximum temperature rating for seals and the anode core is 250° C, good engineering practice requires that a safety factor be allowed. The table shows cooling parameters with the cooling air at 50° C and maximum tube anode temperature of 225° C. The figures are for the tube with air passing in a base-to-anode direction. Pressure drop values shown are approximate and are for the appropriate tube/socket/chimney combination.

Minimum Cooling Air-Flow Requirements

Sea Level		
Plate dissipation (Watts)	Air flow (CFM)	Pressure drop (Inches of water)
7500	592	7.9

At altitudes significantly above sea level, the flow rate must be increased for equivalent cooling. At 5,000 feet above sea level, both the flow rate and the pressure drop should be increased by a factor of 1.21, while at 10,000 feet both flow rate and pressure drop must be increased by 1.46.

Special applications If the user needs to operate this tube under conditions widely different from those given in this publication, contact any location of Svetlana Electron Devices for technical assistance.

Svetlana 4CX7500A

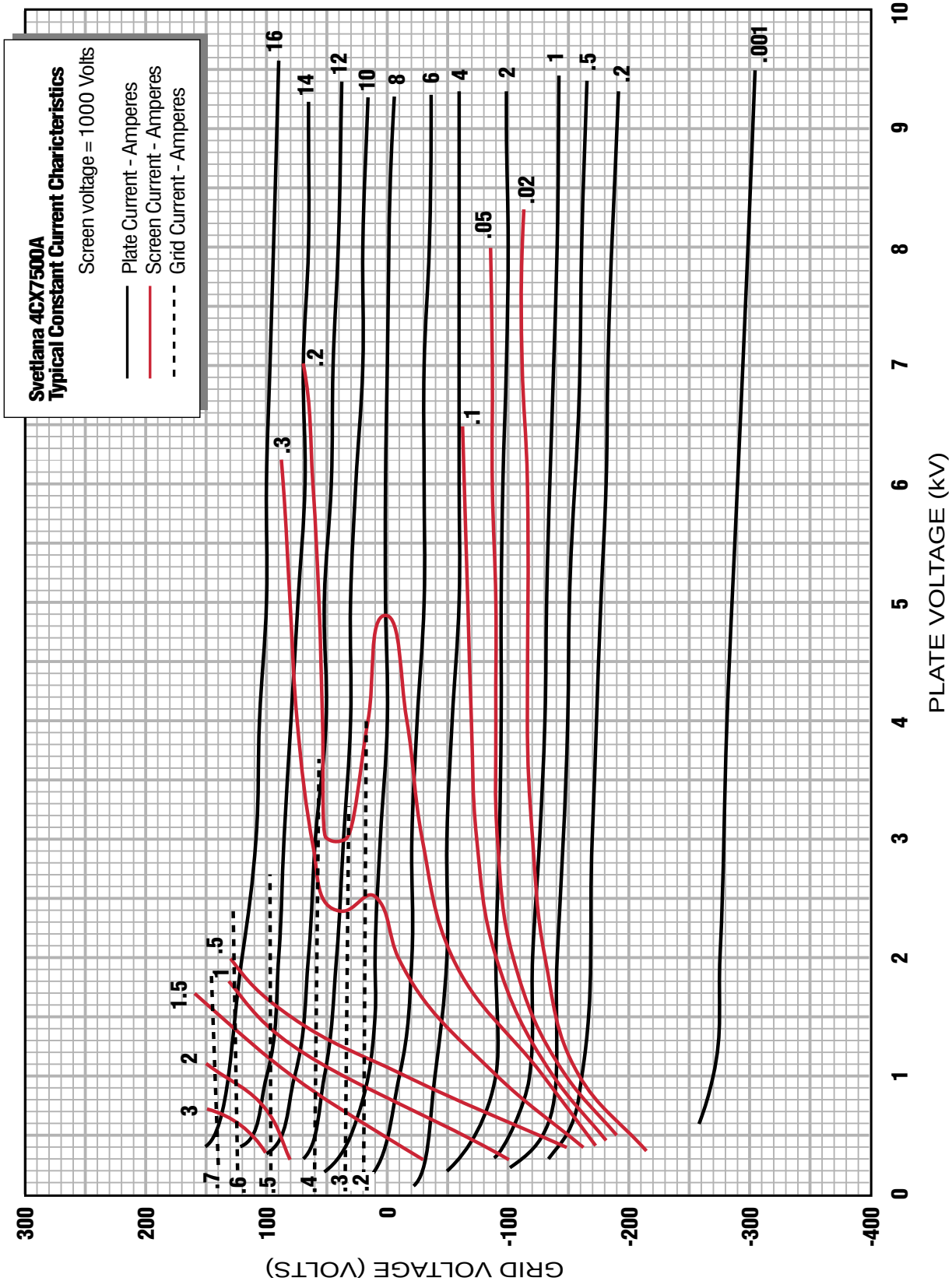

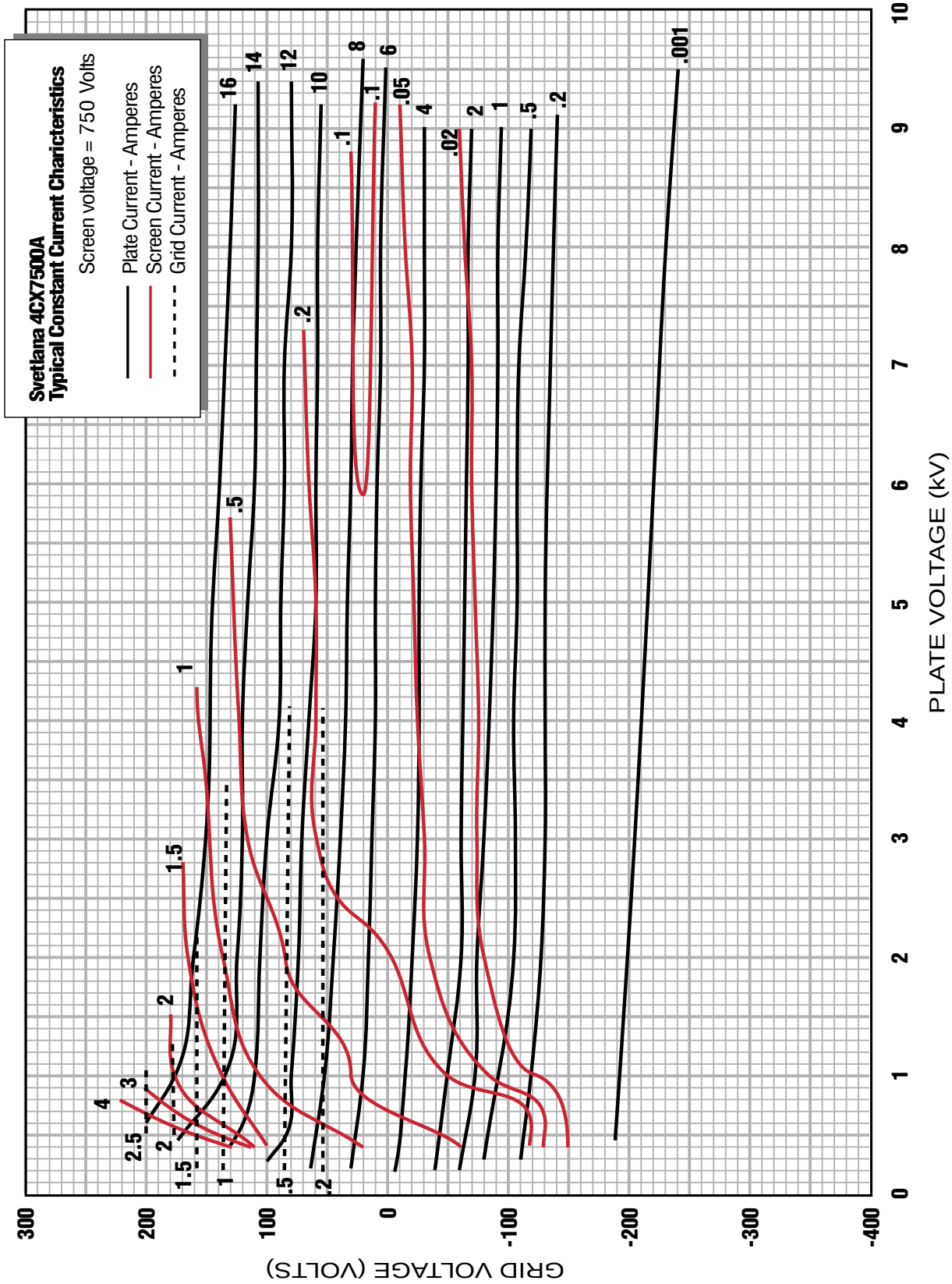
Svetlana 4CX7500A
Typical Constant Current Charicteristics
Screen voltage = 750 Volts
Plate Current - Amperes
Screen Current - Amperes
Grid Current - Amperes
GRID VOLTAGE (VOLTS)
PLATE VOLTAGE (kV)
300
200
100
0
-100
-200
-300
-400
0
1
2
3
4
5
6
7
8
9
10
16
14
12
10
8
6
4
2
1
.5
.2
.001
.05
.02
.1
4
3
2.5
2
1.5
1
.5
.2

Radial Beam Power Tetrode

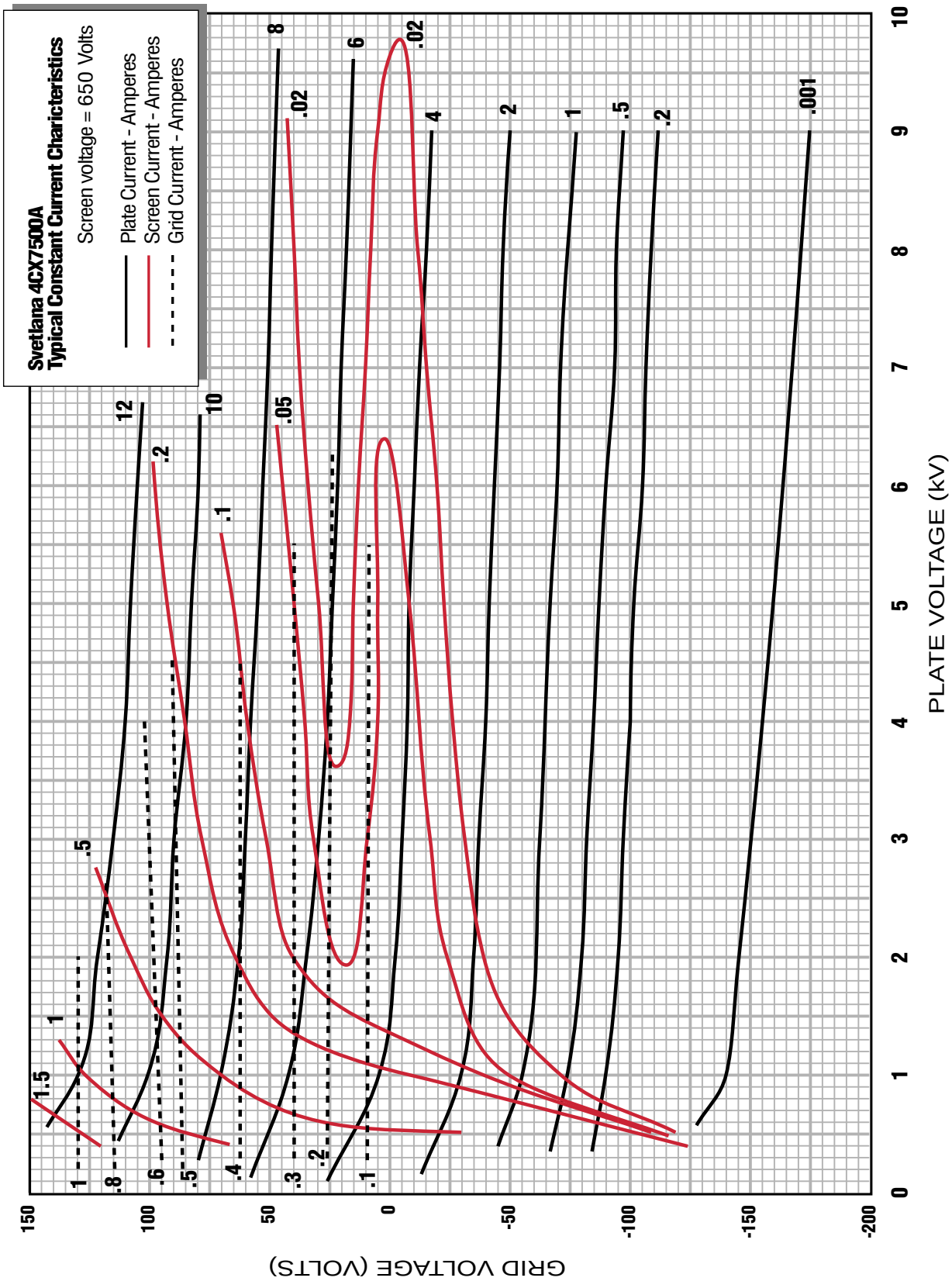
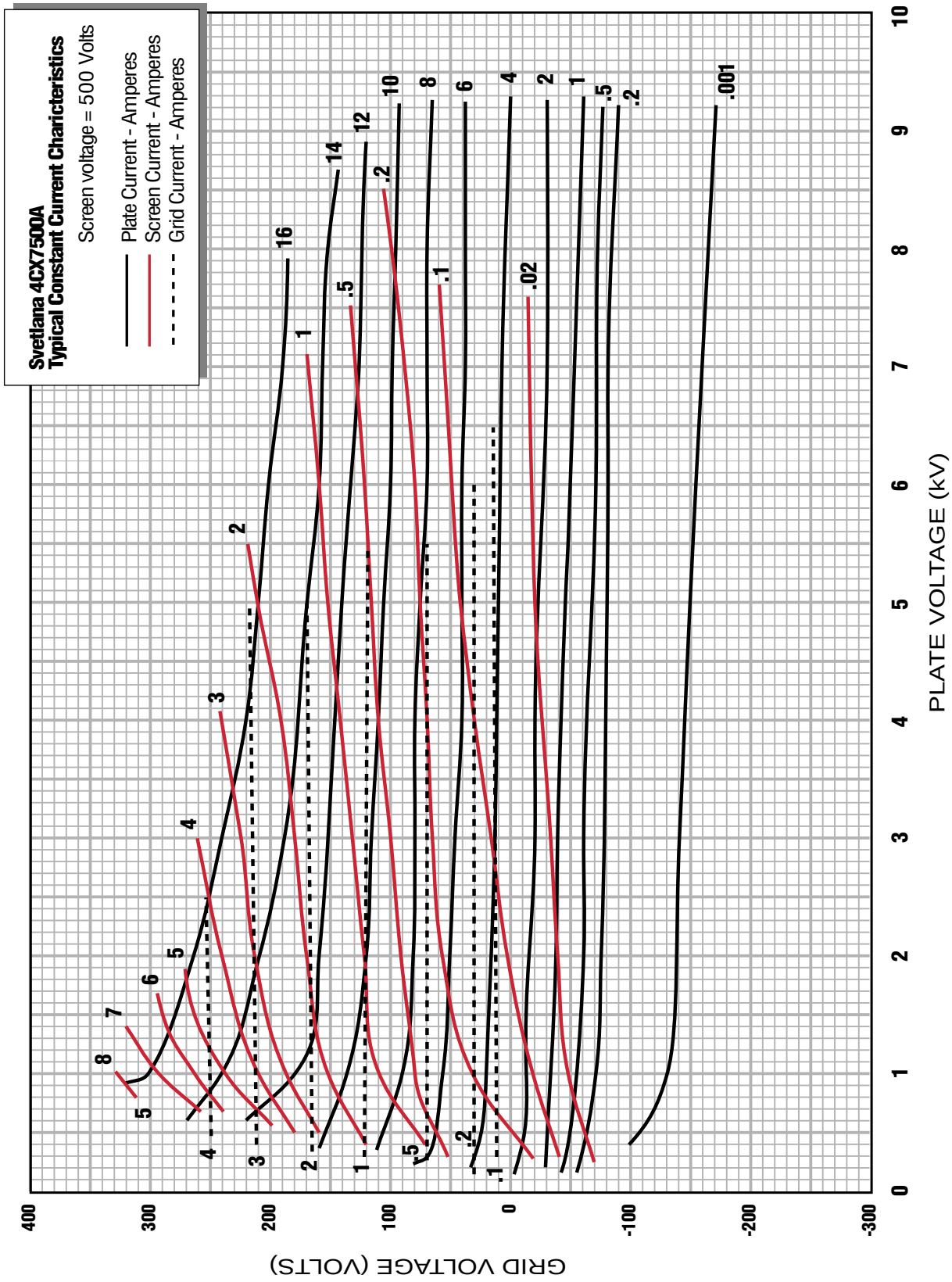
Radial Beam Power Tetrode