TECHNICAL DATA

8809/4CX600J
8921/4CX600JA
ULTRA LINEAR POWER TETRODE

The EIMAC 8809/4CX600J is a ceramic/metal, forced-air cooled, radial beam tetrode with a rated maximum plate dissipation of 600 watts. It is a low-voltage, high-current tube specifically designed for exceptionally low intermodulation distortion and low grid interception. The low distortion characteristics make the 8809/4CX600J especially suitable for radio-frequency and audio-frequency linear amplifier service.

The 8921/4CX600JA has a larger anode cooler for reduced cooling air pressure-drop. It is electrically identical to the 4CX600J.

GENERAL CHARACTERISTICS[1]

ELECTRICAL

Cathode: Oxide Coated, Unipotential

Heater: Voltage	6.0 ± .3 V
Current, at 6.0 volts	5.4 A
Cathode-Heater Potential (maximum)	±150 V
Transconductance (Average):	
I_b = 0.3 Adc, E_{c2} = 350 Vdc	27,000 μmhos
Direct Interelectrode Capacitance (grounded cathode)[2]	
Cin	50.0 pF
Cout	6.3 pF
Cgp	.13 pF

1. Characteristics and operating values are based upon performance tests. These figures may change without notice as the result of additional data or product refinement. EIMAC Division of Varian should be consulted before using this information for final equipment design.

2. Capacitance values are for a cold tube as measured in a special shielded fixture in accordance with Electronic Industries Association Standard RS-191.

MECHANICAL

Maximum Overall Dimensions:

	4CX600J	4CX600JA
Length	2.71 in; 68.8 mm	2.71 in; 68.8 mm
Diameter	2.08 in; 52.8 mm	2.52 in; 64.0 mm
Net Weight	7.7 oz; 218 gm	9.0 oz; 255 gm

Operating Position	Any
Maximum Operating Temperature:	
Ceramic/Metal Seals	250°C
Anode Core	250°C

(Effective 8-15-71) © by Varian

Printed in U.S.A.

Cooling	Forced air
Base	JEDEC B8-236
Recommended Air System Socket	SK-607
Recommended Air Chimney (4CX600J)	SK-646
Recommended Air Chimney (4CX600JA)	SK-656

RADIO FREQUENCY LINEAR AMPLIFIER GRID DRIVEN Class AB

ABSOLUTE MAXIMUM RATINGS

DC PLATE VOLTAGE	3000	VOLTS
DC SCREEN VOLTAGE	450	VOLTS
DC PLATE CURRENT	0.6	AMPERE
PLATE DISSIPATION	600	WATTS
SCREEN DISSIPATION	15	WATTS
GRID DISSIPATION	1	WATT

TYPICAL OPERATION (Frequencies to 30 MHz)
Class AB, Grid Driven, Peak Envelope or Modulation Crest Conditions.

Plate Voltage	2000	2000	2500	Vdc
See Notes	---	(4)	(5 & 6)	
Screen Voltage	350	350	350	Vdc
Grid Voltage 1	-41	-41	-41	Vdc
Zero-Signal Plate Current	300	200	175	mAdc
Single-Tone Plate Current	500	497	680	mAdc
Two-Tone Plate Current	350	365	475	mAdc
Single-Tone Screen Current 3	5	16	30	mAdc
Two-Tone Screen Current 3	-2	3	10	mAdc
Single-Tone Grid Current 3	0	0	0.5	mAdc
Two-Tone Grid Current 3	0	0	0.2	mAdc
Peak rf Grid to Ground Voltage 3	32	39.5	70	v
Single-Tone Useful Output Power	550	553	1100	W
Resonant Load Impedance	2000	2000	2000	Ω
Intermodulation Distortion Products 2				
3rd Order	-43	-46	-40	db
5th Order	-43	-51	-40	db

1. Adjust to specified zero-signal dc plate current.
2. The intermodulation distortion products will be as specified or better for all levels from zero-signal to maximum outout power and are referenced against one tone of a two equal tone signal.
3. Approximate values.
4. Cathode resistor 11 ohms, bypassed by 4000 pF.
5. Cathode resistor 11 ohms, no bypass capacitor.
6. Complex signal such that dc plate current maximum rating of 600 mA not exceeded.

AUDIO FREQUENCY POWER AMPLIFIER OR MODULATOR Class AB, Grid Driven (Sinusoidal Wave)

ABSOLUTE MAXIMUM RATINGS (per tube)

DC PLATE VOLTAGE	3000	VOLTS
DC SCREEN VOLTAGE	450	VOLTS
DC PLATE CURRENT	.6	AMPERE
PLATE DISSIPATION	600	WATTS
SCREEN DISSIPATION	15	WATTS
GRID DISSIPATION	1	WATT

TYPICAL OPERATION (Two Tubes) Class AB1

Plate Voltage	2000	2500	2800	Vdc
Screen Voltage	350	350	350	Vdc
Grid Voltage 1/3	-52	-52	-52	Vdc
Zero-Signal Plate Current	200	200	200	mAdc
Max. Signal Plate Current	1.13	1.14	1.14	Adc
Zero-Signal Screen Current	-1	-2	0	mAdc
Max. Signal Screen Current	52	48	52	mAdc
Peak af Grid Voltage 2	46	46	46	v
Plate Output Power	1430	1720	1985	W
Load Resistance(plate to plate)	3850	4200	4800	Ω

1. Approximate value.
2. Per Tube.
3. Adjust to give stated zero-signal plate current.

NOTE: TYPICAL OPERATION data are obtained from direct measurement or by calculation from published characteristic curves. Adjustment of the rf grid voltage to obtain the specified plate current at the specified bias, screen and plate voltages is assumed. If this procedure is followed, there will be little variation in output power when the tube is changed, even though there may be some variation in grid and screen current. The grid and screen currents which result when the desired plate current is obtained are incidental and vary from tube to tube. These current variations cause no difficulty so long as the circuit maintains the correct voltage in the presence of the variations in current.

RANGE VALUES FOR EQUIPMENT DESIGN

	Min.	Max.	
Heater: Current at 6.0 volts	5.0	5.8	A
Cathode Warmup Time	5	--	minutes

Interelectrode Capacitances[1] (grounded cathode connection)	Min.	Max.
Cin	46.0	54.0 pF
Cout	5.7	7.0 pF
Cgp	---	.2 pF

1. Capacitance values are for a cold tube as measured in a special shielded fixture in accordance with Electronic Industries Association Standard RS-191.

APPLICATION

COOLING - The maximum temperature rating for the anode core of the 4CX600J is 250°C. Sufficient forced air circulation must be provided to keep the temperature of the anode at the base of the cooling fins and the temperature of the ceramic/metal seals below 250°C. Air flow requirements to maintain seal temperature at 225°C in ambient air are tabulated below (for operation below 30 megahertz), for the tube mounted in the recommended air-system socket and chimney, and air flowing in the base-to-anode direction.

Since the power dissipated by the heater represents about 33 watts and since grid plus screen dissipation can represent additional power, allowance has been made in preparing this tabulation for an additional 40 watts dissipation.

The blower selected in a given application must be capable of supplying the desired air flow at a back pressure equal to the pressure drop shown below plus any drop encountered in ducts and filters.

At other altitudes and ambient temperatures the flow rate must be modified to obtain equivalent cooling.

Plate Dissipation Watts	4CX600J			
	Sea Level		10,000 FEET	
	Air Flow CFM	Press.Drop in. water	Air Flow CFM	Press.Drop in. water
300	7.0	.3	10.2	.45
450	12.2	.53	17.7	.78
600	26.5	.81	38.7	1.18
	4CX600JA			
300	7.0	.08	10.2	.11
450	12.2	.13	17.7	.19
600	26.5	.21	38.7	.30

HEATER - The rated heater voltage for these tubes is 6.0 volts. The voltage, as measured at the socket, should be maintained at this value to minimize variations in operation and to obtain maximum tube life. In no case should the voltage be allowed to exceed 5% above the rated value except for short periods.

It is recommended that the heater voltage be applied for a period of not less than 5 minutes before other operating voltages are applied.

Refer to the EIMAC Division of Varian for special instructions if it is necessary to reduce cathode warmup time.

GRID OPERATION - The grid dissipation rating of these tubes is 1 watt. The design features which make these such extremely linear tubes also contribute to very low grid interception. The grid may be driven into the positive grid region in the typical operation of the tube.

SCREEN OPERATION - Tetrode tubes may exhibit reversed screen current to a greater or lesser degree depending on the individual tube. The 4CX600J and 4CX600JA, under some operating conditions, may indicate negative screen currents in the order of 10 milliamperes.

The maximum rated power dissipation for the screen grid is 15 watts and the screen power should be kept below this level. The product of the peak screen voltage and the indicated dc screen current approximates the screen input power except when the screen current indication is near zero or negative. In the usual tetrode amplifier, where no signal voltage appears between cathode and screen, the peak screen voltage is equal to the dc screen voltage. Experience has shown that the screen will operate within the limits established for this tube if the indicated screen current, plate voltage and drive voltage approximate the "Typical Operation" values.

The screen supply voltage must be maintained constant for any values of negative and positive screen currents that may be encountered. Dangerously high plate currents may flow if the screen power supply exhibits a rising voltage characteristic with negative screen current. Stabilization may be accomplished in several different ways. A bleeder resistor may be connected from screen to cathode; a zener regulator may be connected from

screen to cathode; or an electron-tube regulator circuit may be used in the screen supply. It is absolutely essential to use a bleeder if a series regulator is employed. The screen bleeder current should approximate 20 milliamperes to adequately stabilize the screen voltage. It should be observed that this bleeder power may be usefully employed to energize low-power stages of the transmitter.

PLATE OPERATION - The maximum rated plate dissipation power is 600 watts. Except for brief periods during circuit adjustments, this maximum value should not be exceeded.

The top cap on the anode cooler may be used as a plate terminal at low frequencies or a circular clamp or spring-finger collet encircling the cylindrical outer surface of the anode cooler may be used at high frequencies.

Points of electrical contact with the anode cooler should be kept clean and free of oxide to minimize radio-frequency loses. The anode cooler should be inspected periodically and cleaned when necessary to remove any dirt which might interfere with effective cooling.

INTERMODULATION DISTORTION - The typical radio frequency linear amplifier operating conditions, including the distortion data, are based on actual operation in a grid-driven amplified. Because the 4CX600J and 4CX600JA have very low grid interception it is possible to drive the grid positive with minimum adverse effects upon the distortion level or upon the driver. Class AB2 linear amplifier operation is therefore possible and recommended. It is also recommended that a low impedance driver be used and that the input of the 4CX600J or 4CX600JA be swamped with a 1000 ohm resistor from grid to cathode so as to provide an almost constant load to the driver.

In general, linearity is improved as grid bias value is shifted toward Class A operation. Linearity may also be improved without sacrifice of efficiency by use of cathode resistors bypassed for rf, or with no bypass capacitor. See "Radio Frequency Linear Amplifier, Typical Operation".

CAUTION-HIGH VOLTAGE - Operating voltage for the 4CX600J and 4CX600JA can be deadly, so the equipment must be designed properly and operating precautions must be followed. Design equipment so that no one can come in contact with high voltages. All equipment must include safety enclosures for high voltage circuits and terminals, with interlock switches to open the primary circuits of the power supply and to discharge high voltage capacitors whenever access doors are opened. Interlock switches must not be bypassed or "cheated" to allow operation with access doors open. Always remember that HIGH VOLTAGE CAN KILL.

INTERELECTRODE CAPACITANCE - The actual internal interelectrode capacitance of a tube is influenced by many variables in most applications, such as stray capacitance to the chassis, capacitance added by the socket used, stray capacitance between tube terminals, and wiring effects. To control the actual capacitance values within the tube, as the key component involved, the industry and the Military Services use a standard test procedure as described in Electronic Industries Association Standard RS-191. This requires the use of specially constructed test fixtures which effectively shield all external tube leads from each other and eliminates any capacitance reading to "ground". The test is performed on a cold tube. Other factors being equal, controlling internal tube capacitance in this way normally assures good interchangeability of tubes over a period of time, even when the tube may be made by different manufacturers. The capacitance values shown in the manufacturer's technical data, or test specifications, normally are taken in accordance with Standard RS-191.

The equipment designer is therefore cautioned to make allowance for the actual capacitance values which will exist in any normal application. Measurements should be taken with the socket and mounting which represent approximate final layout if capacitance values are highly significant in the design.

SPECIAL APPLICATION - If it is desired to operate this tube under conditions widely different from those listed here, write to Power Grid Tube Division, EIMAC Division of Varian, 301 Industrial Way, San Carlos, California 94070, for information and recommendations.

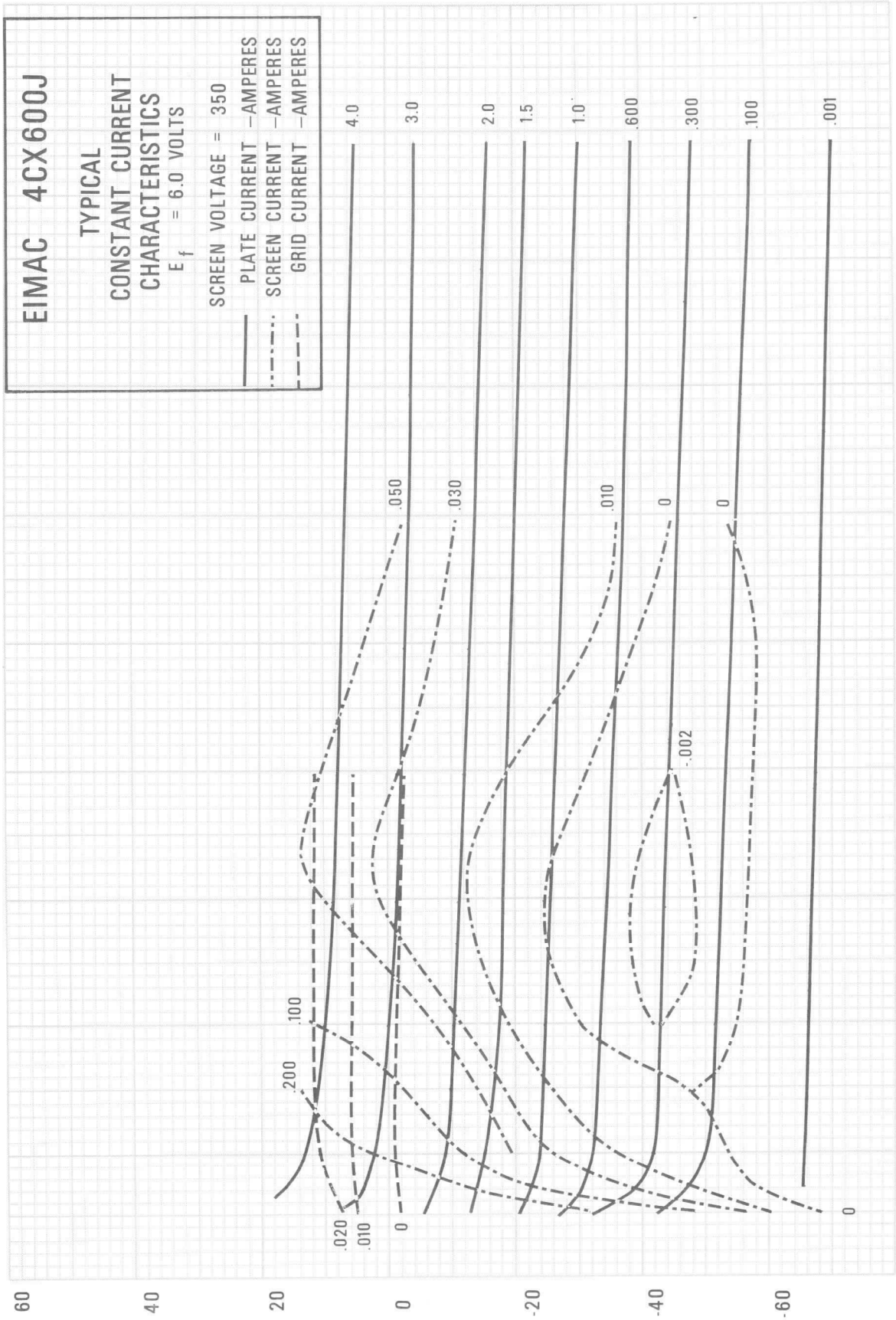
EIMAC 4CX600J
TYPICAL
CONSTANT CURRENT
CHARACTERISTICS
E_f = 6.0 VOLTS
SCREEN VOLTAGE = 350
PLATE CURRENT –AMPERES
SCREEN CURRENT –AMPERES
GRID CURRENT –AMPERES
4.0
3.0
2.0
1.5
1.0
.600
.300
.100
.001
.050
.030
.010
0
0
.002
0
.200
.100
.020
.010
0
0
60
40
20
0
-20
-40
-60
-80
0
1
2
3
4
5
GRID VOLTAGE (V)
PLATE VOLTAGE (KV)

CURVE #3836

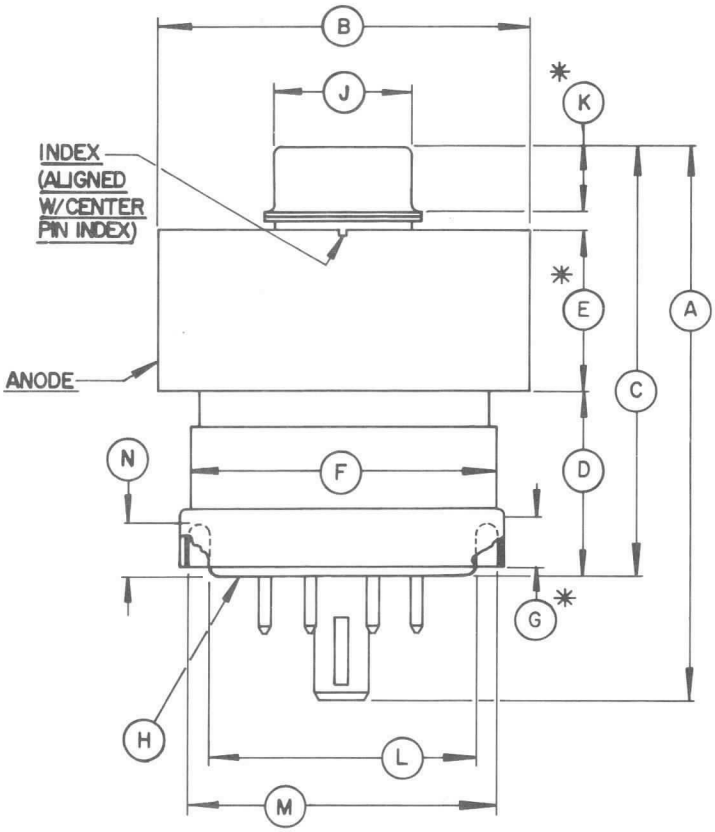

8809/4CX600J				
DIMENSIONAL DATA				
DIM.	INCHES		MILLIMETERS	
	MIN.	MAX.	MIN.	MAX.
A	2.507	2.707	63.68	68.76
B	2.050	2.080	52.07	52.83
C	1.973	2.173	50.11	55.19
D	0.910	1.030	23.11	26.16
E	0.710	0.790	18.03	20.07
F	--	1.406	--	35.71
G	0.187	--	4.75	--
H	BASE: B8-236 (JEDEC DESIGNATION)			
J	0.559	0.573	14.20	14.55
K	0.240	--	6.10	--
L	1.175	1.190	29.85	30.23
M	1.325	1.360	33.66	34.54
N	0.205	--	5.21	--
8921/4CX600JA				
B	2.485	2.515	63.00	63.80
ALL ELSE SAME AS ABOVE				

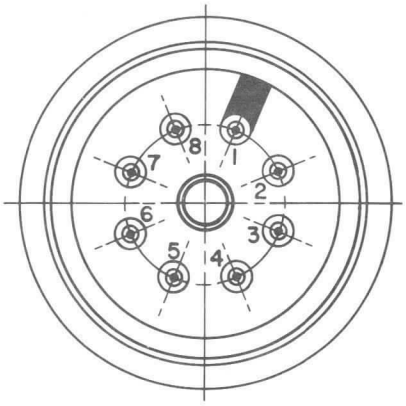

PIN DATA

PIN 1 &/OR BASE RING-SCREEN GRID
PINS 2,4,7-CONTROL GRID
PINS 3,6,8-CATHODE
PIN 5-HEATER
CENTER PIN-HEATER